ANKITS

the authority in high end audio kits

15 YEARS OF ANKITS 2004-2018

Interstage Monoblock 300B SET Amplifier

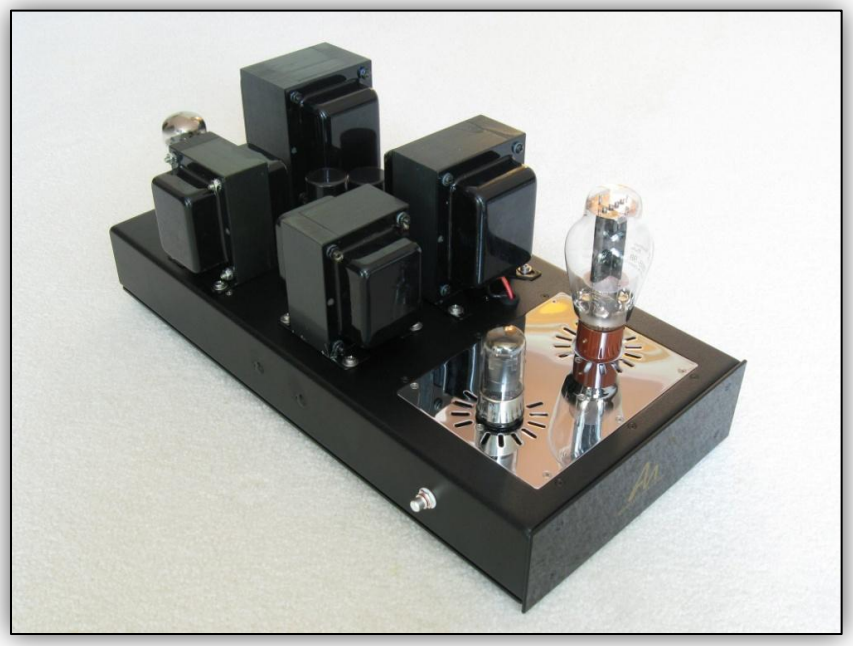

Construction Manual

Version 3.05, August 2019

audionotekits@rogers.com

1-613-822-7188

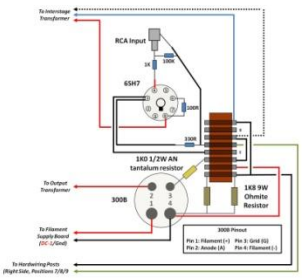

Table of Contents

Section 1 — Introduction 5

1.1 About ANK Audio Kits 6
1.2 Basic Operation of the Amplifier 7
1.3 Schematic 9
1.4 Equipment 10
1.4.1 Overview of the Kit 10
1.5 Tips and Suggestions 10
1.5.1 Soldering 10
1.5.2 Components 11
1.5.3 Resistor Sizes 11
1.5.4 Capacitor Manufacturers and Voltage Ratings 11
1.5.5 Electrolytic Capacitors 11
1.5.6 Diodes 12
1.5.7 Hardware/Mechanical 12
1.5.8 Wire Stripping and Tinning 12
1.5.9 Wire Color 13
1.5.10 Optional Finishing Touches 13
1.6 Build Process 13
1.6.1 Some Good Rules of Thumb for Building Your Amplifier 13
1.6.2 Organization of this Manual 14
1.6.3 Electrical Safety Warning 17

Section 2 — Mechanical Assembly 18

2.1 Overview 18
2.2 Installing the Rubber Grommets 19
2.3 Installing the Clamps 20
2.4 Installing the Valve Base 21
2.5 Installing the Ceramic Posts 22
2.6 Installing the IEC Socket and Rocker Switch 23
2.7 Installing the Mills Resistor 24
2.8 Installing the Hex Standoffs 25

Section 3 — Installing the Transformers 27

3.1 Overview 27
3.2 Installing the Mains Transformer 28
3.3 Installing the Choke 33
3.4 Installing the Interstage Transformer 34

www.AudioNoteKits.com
audionotekits@rogers.com

3.5 Installing the Power Supply Capacitors 35
3.6 Installing the Output Transformer 37

Section 4 — Power Supply Wiring 39

4.1 Overview 39
4.2 Preparing the Chassis Ground 42
4.3 Wiring the IEC, Rocker Switch and Mains 45
4.4 Wiring the 8-pin Valve Base 47
4.5 Wiring the Ceramic Post Resistors and Capacitors 48
4.6 Initial Mains Secondary Wiring 50
4.7 Wiring the Choke 51
4.8 Additional Capacitor Wiring 52

Section 5 —Filament Supply Board Installation 54

5.1 Overview 54
5.2 Parts List 55
5.3 Installing the Resistors 55
5.4 Installing the Capacitors 56
5.5 Installing the Bridge Rectifier 57
5.6 Installing the Regulator 58

Section 6 —Filament Supply Board Interwiring 59

6.1 Overview 59

Section 7 — Front Insert Plate Wiring 61

7.1 Overview 61
7.2 Installing the Valve Bases and the Tag Strip 61
7.3 Installing the Resistors 62
7.4 Installing the Capacitors 63
7.5 Additional Wiring 64
7.6 Mounting the Front Insert Plate and Further Wiring 64

Section 8 —Interstage Transformer Wiring 66

8.1 Overview 66

Section 9 —Installing and Wiring the Rear Connectors 67

9.1 Overview 67
9.2 Installing the RCA Input Jack 67
9.3 Wiring the RCA Input Jack 68

www.AudioNoteKits.com
audionotekits@rogers.com

9.4 Installing the Speaker Posts 70

Section 10 —Wiring Check Lists 71

Section 11 — Testing 74

11.1 Overview 74
11.2 Installing the Fuse 75
11.3 Initial Tests 76
11.4 First Power-Up 77
11.5 Voltage Tests 78
11.5.1 HT and 300B Voltages 79
11.5.2 6SH7 Voltage 80
11.5.3 Power Supply Voltages 80
11.6 Sound Check 81
11.7 Debugging 82

Section 12 — Finishing Touches 83

12.1 Installing the Front Faceplate 83
12.2 Installing the LED 83
12.3 Installing the Chassis Top 83

Section 13 — Final Thoughts 84

13.1 Congratulations 84
13.2 Cables 84
13.3 Tube Rolling 85
13.3.1 5U4G 85
13.3.2 6SH7 85
13.3.3 300B 85
13.4 Thanks 86

Appendix 87

Resistor Color Code Reference 88
Mains Wiring for 240V 89

www.AudioNoteKits.com
audionotekits@rogers.com

Section 1

Introduction

Thanks for purchasing the ANK Audio Kits Interstage Monoblock 300B SET Amplifier. Our goal is to provide you with the highest quality kit that you will build from scratch with these instructions.

This is very high end and sophisticated piece of audio equipment that will surely become a showpiece of your sound system. We're excited that you have chosen to join us in enjoying and appreciating superb audio and we've created this manual to help guide you through each step of the assembly process with as much detail and clarity as possible. To facilitate the build process, the manual has been divided into a number of sections, each focusing on a separate aspect of the system: follow the sections in order and we guarantee you not only a problem-free experience, but a pleasant time doing so. If you are new to building kits, or if at any time you feel as though you need help or advice, feel free to contact us and we will do whatever it takes to get you on the right track.

www.AudioNoteKits.com
audionotekits@rogers.com

1.1 About ANK Audio Kits

Audio Note (UK) started out in the early '90s developing several DIY audio kits while they were building up their finished product business. DIY Audio has a long history and it was an opportunity for knowledgeable customers to take advantage of world class designs and components. Audio Note (UK) was focused on using the very finest materials and components custom-made to their specifications, across their entire product line — from custom film and electrolytic capacitors to tantalum resistors, transformers, binding posts, wires, etc. The Kit1 300B Single Ended integrated amplifier was born during development of the Meishu and it proved to be extremely popular worldwide. The ANKit business was born!

As the finished product business and dealer network started to flourish, Audio Note (UK) eventually moved the kit business off into a separate division; thus, in 2004, Audio Note Kits started up and was supported by a website so that customers not located near Audio Note (UK) dealers could order kits and have them shipped direct. Kit development continued in earnest during the 2000s with development assisted by Audio Note (UK) engineering. Audio Note (UK) parts were used throughout the kits, depending on the various levels and budgets. By 2013, ANK Audio Kits (as it came to be called) had developed a wide product range covering all areas of two channel audio: a single-ended 300B product line, an EL34 classAB and single-ended product line, digital to analog converters, pre-amplifiers, Phono stages, and Audio Note (UK) speaker kits. The end result today is that customers worldwide with DIY skills can now build an entire high end audio system to their liking. With the introduction of higher levels in 2013 and the release of the Level 5 Mentor Pre-amplifier and the DAC 5.1 Signature, some customers wanted these high end products assembled by a professional builder. As a result, ANK Audio Kits began offering this service for Level 4 and 5 products so that a significant investment in a kit could be turned into a work of art! Since ANK Audio Kits was born in 2004, over 2,500 kits have been shipped to customers worldwide. Clearly, there is a real demand for high end audio kits and ANK Audio Kits has been delivering the goods now for 15 years.

We believe and hope that you will have a great experience building your kit and we look forward to hearing from you about your experience.

Regards,

Brian Smith — Director ANK Audio Kits

www.AudioNoteKits.com
audionotekits@rogers.com

1.2 Basic Operation of the Amplifier

ANK Audio Kits is proud to present the Interstage Monoblock 300B SET Amplifier. As anyone who has ever heard the transcendent musicality of a single-ended amplifier will tell you, there is something very special about the music that flows from (relatively) simple, classic Class A triode circuits. Perhaps it's the absence of crossover distortion, perhaps it's the gorgeous midband reproduction, perhaps it's the zero feedback design, perhaps it's the organic (even desirable) expressiveness of the second harmonic; more likely it's all of this and more.

ANK Audio Kits and SET amplifiers go a long way back, right to the beginning in fact, with our Kit1 300B, which has had successive and successful anniversary editions. It's no surprise then that these 300B single and parallel SET monoblocks are simply awesome! A pair of these power amplifiers are a perfect mate for the Mentor pre-amplifier and a path to truly exceptional audio enjoyment.

Design Elements

The Interstage Monoblock 300B SET Amplifier is a uniquely different amplifier — it is our highest and most extreme expression of single-ended amplification, reserved for the true connoisseur audiophile. The interstage transformer design style is currently used on Audio Note (UK)'s top of the line Ongaku 211 amplifiers. Importantly, rather than an additional tube driver stage, the interstage transformer takes over this task, for ultimate authority, providing a level of realism and detail that you may not have experienced and driving the 300B triode in single-ended mode. The triode then drives the output transformer (OP-300).

Audio Note (UK)'s Peter Qvortrup has underscored the significance of interstage transformers:

> *"It is becoming increasingly obvious that applying transformers at every stage of an amplifier yields a great benefit in sound quality, provided of course that the transformer in question is of an appropriate quality and design. Replacing any coupling capacitors with a well designed and correctly matched driver or interstage transformer yields an almost shocking improvement in sound and should be tried to fully understand what a good wide band transformer has to offer."*

It's also interesting to read what Audio Note (UK)'s design engineer Andy Grove has to say about the theory behind the key concepts of this amplifier:

> *"I explained in the interstage transformer article about the virtues of transformer coupling to the output valves, and here the bifilar interstage transformer is used to full advantage. The extremely high impedance AC load to the 6SH7 means that you get more or less the full gain of the valve, and the loadline is horizontal, which means because the 6SH7 is so linear the distortion produced by the driver stage is very low, and predominantly even order. It's an innate characteristic that a good triode has a constant mu over a wide range of operating*

www.AudioNoteKits.com
audionotekits@rogers.com

conditions, therefore, as has been known for a long time, if a triode is run in constant current mode (either by active load, or by transformer or choke loading) then the valve is as linear as it can be. The secondary side of the transformer provides a low impedance path to ground for grid current."

The amplifier has an ultra sturdy 3mm aluminum chassis, powder coated black with a solid copper insert plate coated in a high gloss clear coating so that it is protected from scratches and will never change color. It has a new Mains transformer (T-195) and uses the classic 5U4G(B) rectifier tube and the latest Mundorf MLytic 4-pole capacitor technology to smooth the AC power — and the DC filaments and a substantial Choke (CH-170) assure dead quiet operation. Other amplifier features include the 6SH7 input tube, which was selected by Andy Grove for reasons related to the input impedance and sensitivity in mating with a pre-amplifier; a large 1:1 interstage transformer bifilar wound sitting on a very large core for superb bass response; high quality black Teflon 4- and 8-pin valve bases; and Audio Note (UK) hardwire tag strips.

www.AudioNoteKits.com
audionotekits@rogers.com

1.3 Schematic[1]

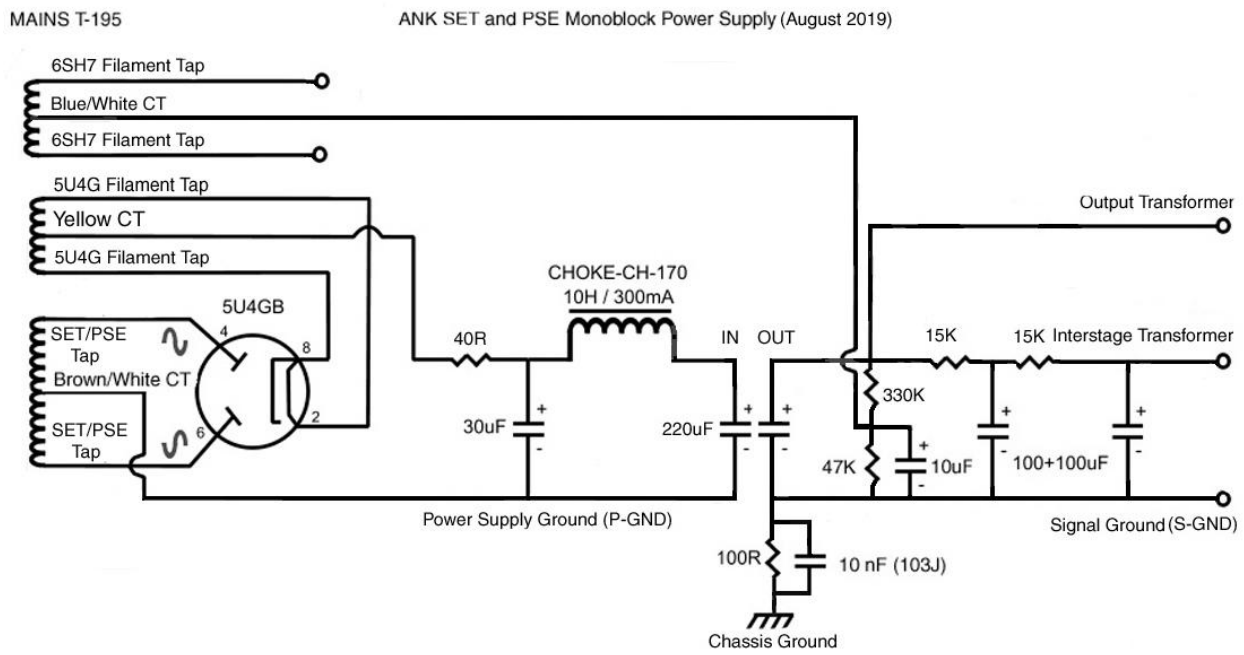

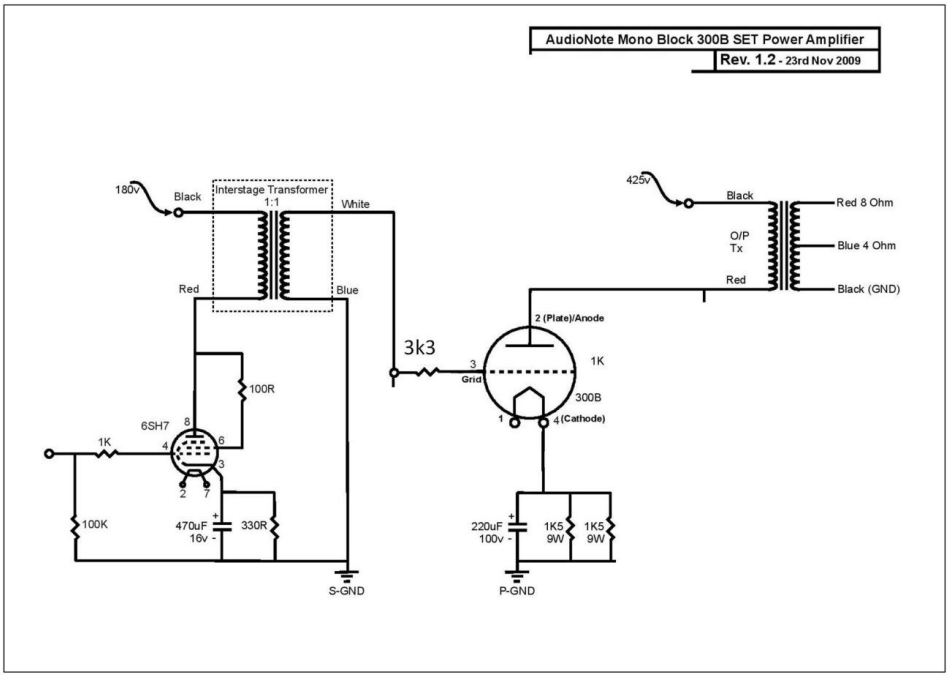

[1] From time to time revisions and upgrades to products result in circuit changes that are not always reflected in manuals. If you encounter any issues with how this schematic relates to your build that need clarifying, contact us at audionotekits@rogers.com.

1.4 Equipment

Here is the list of equipment that will be required:

- Philips screwdriver
- A pair of quality wire strippers
- A large, organized work area
- Soldering iron station with wet sponge
- Lead-based solder (4% Silver is recommended)

1.4.1 Overview of the Kit

In your kit you will find a series of kit bags containing all the hardware, wire, and parts for the associated sections of the amplifier. See the Parts List files on the disk to match up the parts in the kit bags with the lists. There is also a Master list for the kit.

1.5 Tips and Suggestions

We have learned a lot about kit building over the last decade from our customers and I'd like to share some tips with you to ensure a successful project. Please read through this section thoroughly, it will give you a good idea of what's ahead and help ensure your success!

1.5.1 Soldering

We highly recommend using lead-based solder with some silver content[2] on the build. You should use lead-free ONLY if you are experienced using it and confident. Lead-free solder requires a higher melting temperature and thus is more difficult to use. We don't recommend lead-free solder for first-time builders.

We suggest that you practice your soldering before starting on the kit. Feel free to request practice parts with your kit so that you can practice tinning wires and making nice solder joints. The key is a good soldering station with a sponge, the right temperature, a good size tip, and experience; remember, tips can wear out so make sure your tip is working. (You can also check out YouTube videos for soldering lessons and examples.) The solder should flow freely; if it's forming balls then there is likely a problem with the tip, the temperature, or (sometimes) the surface. Feel free to contact us for help!

[2] For example, WBT-0800.

www.AudioNoteKits.com
audionotekits@rogers.com

1.5.2 Components

Using the Ohm setting on your multimeter is very useful when building a kit. It's a good, practical way of measuring resistors and continuity and is much easier than reading the color codes on the side. (With practice, the color codes can also be a good way to determine the resistance, but that method is better left to experienced builders.)

1.5.3 Resistor Sizes

Resistors today, particularly metal film resistors, are often smaller than you might expect. It used to be that the difference between a 1/2W and a 1W resistor was obvious: the 1W was considerably larger. That way of looking at things sometimes now no longer applies. Please be assured that all resistors supplied with ANK Audio Kits are rated at least per the specified wattage: in some cases, a higher than specified wattage may be supplied.

1.5.4 Capacitor Manufacturers and Voltage Ratings

Occasionally, depending on parts availability, we may use capacitors from different manufacturers. These will always be of equal or higher quality! As a result, some of the pictures in the manual may look a bit different at times. With regard to voltage ratings, normally, the voltage rating of the supplied capacitors will be exactly what you see on the parts lists. Occasionally, a part may be supplied with a higher voltage. Think nothing of it!

1.5.5 Electrolytic Capacitors

For those who have not built a piece of electronics before, here is a little lesson on capacitors. There are basically two types of capacitors that we use in the kits: electrolytic and signal capacitors. Of these, electrolytic capacitors require special attention. Electrolytic capacitors are "polarized," which means they have a POSITIVE (+) and a NEGATIVE (–) lead and typically have values like 100uf 450V, 10uf 160V, or 470uf 35V. *These capacitors need to be installed correctly or else they will possibly blow up at some point!*

Each electrolytic capacitor will have a *wide stripe* on the NEGATIVE side. Always ensure that this stripe (NEGATIVE) is positioned correctly. There are several keys on a printed circuit board to help you to know how to position the capacitor:

1. There may be a "+" on the board indicating where to position the POSITIVE lead.
2. The segmented half of the circular stencil on the board shows where to position the NEGATIVE lead. The unsegmented ('half-moon') part of the circle is where the POSITIVE lead goes.
3. The POSITIVE lead goes to a square solder pad while the NEGATIVE lead goes to a round solder pad.

www.AudioNoteKits.com
audionotekits@rogers.com

1.5.6 Diodes

When installing diodes note that they are oriented with a stripe — *match the stripe on the diode with the banding (|||) stencil on the board.*

1.5.7 Hardware/Mechanical

Not all of us are mechanically oriented. So, the kit is well laid out such that all the hardware is provided and bagged in individual sections, so things should make sense. Start thinking mechanically because about a third of the kit is mechanical. The first thing to remember is that good hardware is beautiful: we use all stainless steel metric hardware in the kits. It truly is a thing of beauty: don't rush your hardware! Here are a few helpful things to understand:

- We use British metric hardware (M3, M4, M5, screw size 10mm, 15mm, etc..) as opposed to the American imperial system (5/1000th or 50/1000th, 1 inch, 3/4 inch). Please familiarize yourself with the hardware in the kit.

- The screws will be called M3 or M4, which is the diameter of the shaft. The length of the shaft will be in millimeters, so you will encounter things like an M4 screw 16mm, a PAN head screw (which is a round spherical head), or a COUNTERSUNK or FLAT head screw (a screw head that needs to be flush with a surface — for example, under a transformer). So if you are asked to use an M3 16mm CSK screw, this is an M3 size (obviously), which is a thinner shaft diameter than an M4; 16mm is the length of the shaft; and the head type is CSK, which is a countersunk or flat head screw.
- Once you have the screws mastered, look at the matching nuts such as M4 nut or M3 nut and corresponding washers.

- Standoffs are common in the kits (again, they are either M3 or M4 size, with different lengths). They are typically threaded, so the screw goes into them.

- If any of the hardware is confusing or something is not fitting right, please email us.

1.5.8 Wire Stripping and Tinning

When it comes to wires, we typically use 18 gauge (thicker) and 22 gauge in the kits. It's PTFE: Teflon silver-plated copper wire. Basically this is classed as hook-up wire; we typically twist wire for you when it needs to be. The other wire we use is called shielded cable, like an AN-A (Audio Note (UK)) for signals. This is two-conductor wire: one is for the signal and the other (a big ground braid wrapped around the signal wire) is the shielding, which helps prevent the cable from picking up noise. You should practice stripping some 18g or 22g wire, and then try tinning this wire; this is the process of adding solder to the bare wire so that the invisible coating on the wire is burned off. This makes for easy soldering to a PCB, an RCA connector, or a transformer terminal. So it's a good idea to practice this a little before starting the kit.

1.5.9 Wire Color

In the earlier sections of this manual, particularly those sections dealing with the Mains transformer and Choke wires, the colors of the wires should match the color of the wires in your kit. If they don't, or if you're unsure about things, contact audionotekits@rogers.com. Later on, at the Interwiring stage, there may be some differences between the descriptions (or pictures) of the color of wires that you will connect and the color of the wires supplied with your kit; for example, depending on inventory, we may supply a Black–Red twisted pair instead of a Green–Red (or vice-versa). Don't worry! Just be sure to check the wiring diagrams carefully and connect the correct points together and all will be well!

1.5.10 Optional Finishing Touches

From time to time we get asked about some of the build details of the ANK Finished Products that you can see in the pictures in the "Assembled Kits Gallery!" (https://ankits.smugmug.com/) on our website. It's important to understand that these stunningly beautiful products were done by an accomplished professional builder with decades of experience and that some particulars of the build may be beyond most of us. However, experienced builders who want to incorporate some of these finishing touches should feel free to do so. While we don't officially support or supply parts for these optional enhancements, there's no reason why you couldn't or shouldn't do them if you want to and feel that you can handle them. Without getting into the details (you're on your own here), what you'll want to get hold of are: heatshrink (to bundle wires), cable ties (to secure large capacitors), stacked (male/female) standoffs and cable clamps (to elevate and secure signal cables), and cable sleeving. You can get some of these from your local hardware store (for example, 1/4" Cable Clamps) and other, more specialized, parts from online distributors such as Grainger, Digi-Key, Mouser, or Cable Ties and More. If you do decide to dress your build with some of these, please send us a picture or two. We'd love to see what you did!

1.6 Build Process

1.6.1 Some Good Rules of Thumb for Building Your Amplifier

- Take your time, prepare, and try and work on a small task each time you start to build the kit.
- Instead of rushing through another section — use the end of your session to check your work. Always ask yourself if the step you are performing makes sense.
- Have fun with your build and savour the experience. Take the time to do a really good job!
- Feel free to contact us via email audionotekits@rogers.com if you have any questions or suggestions during your build — and feel free to send us pictures, etc. We'd be pleased to give you tips along the way.

1.6.2 Organization of this Manual

Building an amplifier takes time and requires attention to detail and concentration. It's not something that you should rush: take the time, be patient, and give yourself a break when necessary. To help guide you through the process, we've divided the work into a number of discrete tasks, each with its own section in the manual. The big picture is simple: we'll begin with the mechanical assembly and then progress to the wiring. We provide easy to follow, step-by-step assembly and wiring instructions and we prepare the parts you'll need in 15 separate sections, with all IEC cabling and twisted wire prepared for you ahead of time, making it easy to work through each build stage. The result: we hope that your kit is a joy to build!

We've divided the build and the manual into the following sections:

1. Introduction
2. Mechanical Assembly
3. Installing the Transformers
4. Power Supply Wiring
5. Filament Supply Board Installation
6. Filament Supply Board Interwiring
7. Front Insert Plate Wiring
8. Interstage Transformer Wiring
9. Installing and Wiring the Rear Connectors
10. Wiring Check Lists
11. Testing
12. Finishing Touches
13. Final Thoughts

Appendix

www.AudioNoteKits.com
audionotekits@rogers.com

Here's another way of looking at how the manual is organized and how the sections fit into the 'big picture': the main sections are mapped so that they mirror how the components will be positioned in the amplifier chassis, top and bottom, as shown below:

Top Side

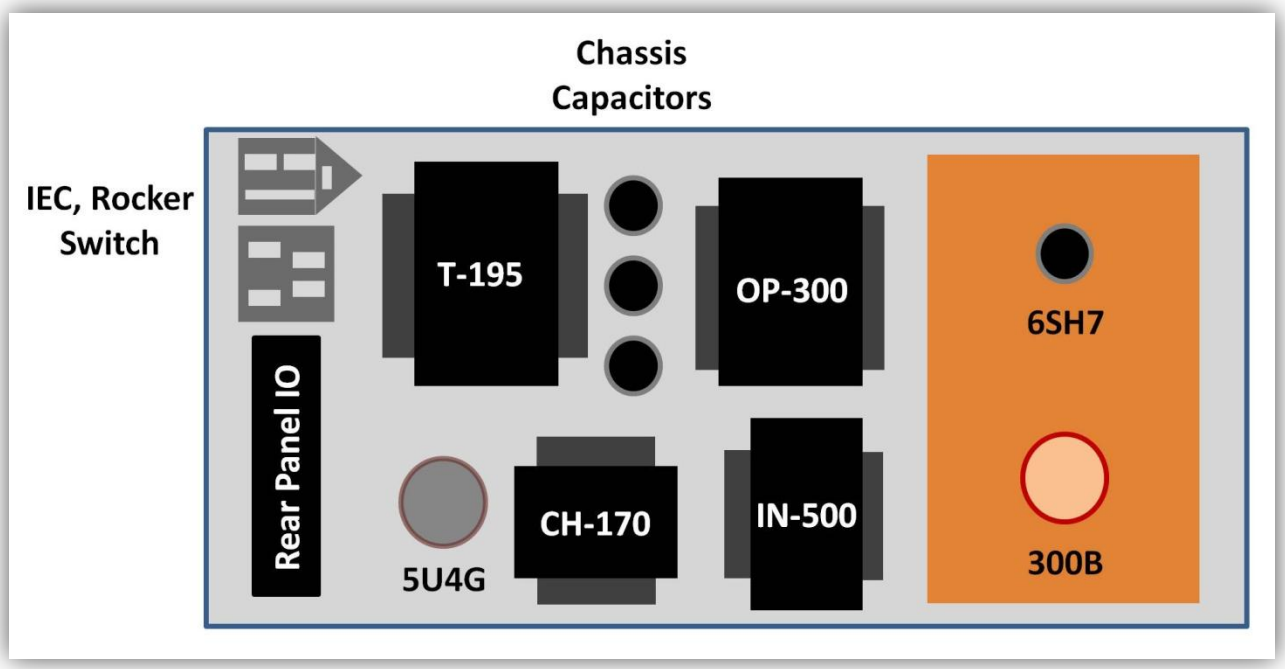

Bottom Side

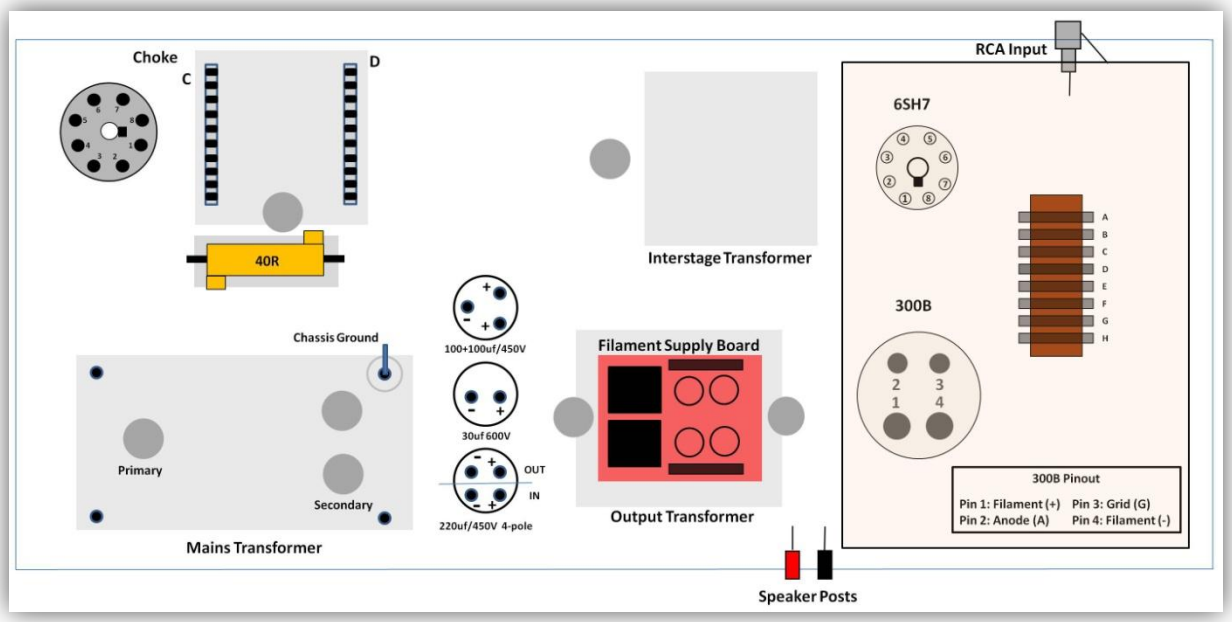

www.AudioNoteKits.com
audionotekits@rogers.com

The bottom-side view is used throughout the manual for the point-to-point wiring. *For the most part, each graphic slide shows only the wiring to be done in that sub-section and — not to have information overload — may not show wiring previously completed.* The overlaid routing of all the point-to-point wiring underscores why it's a good to go slowly, think carefully about wire length and routing, and use like heatshrink and cable ties to keep things neat and tidy, as in the picture below.

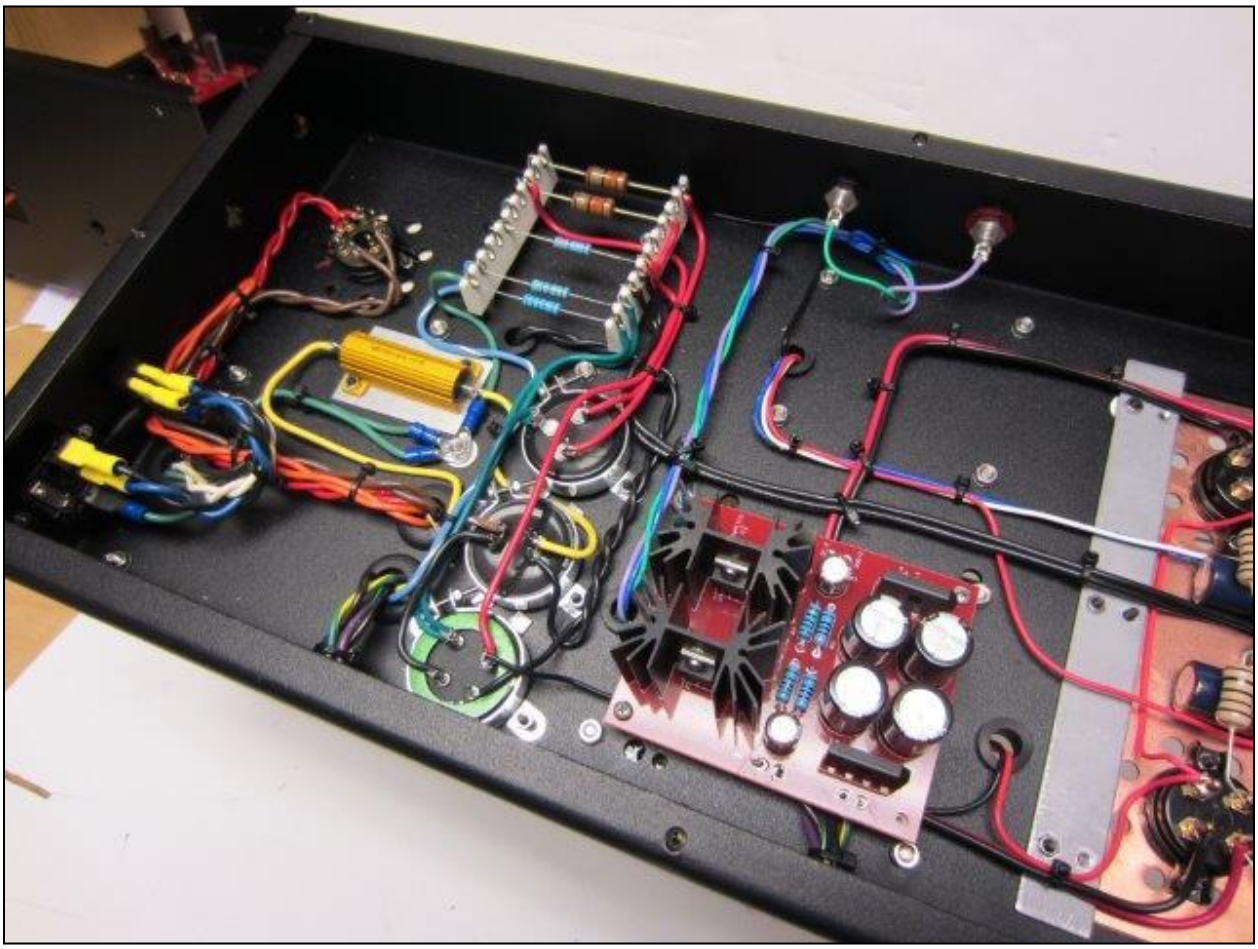

www.AudioNoteKits.com
audionotekits@rogers.com

1.6.3 Electrical Safety Warning

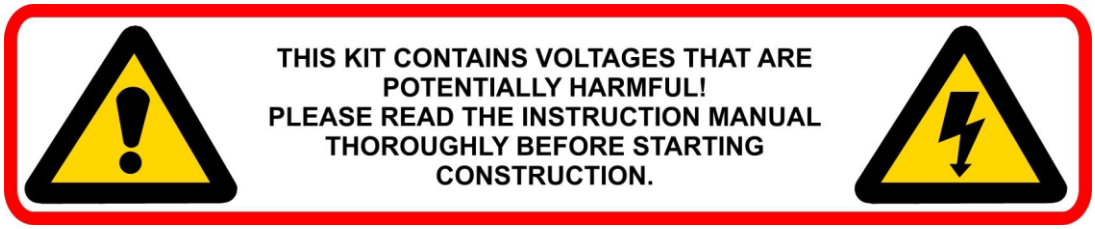

Please be aware of proper electrical safety.

There are sufficient voltages in this kit to give you a very nasty and harmful shock, so be careful when powering on, debugging, and probing around.

Please contact ANK Audio Kits via phone or email (audionotekits@rogers.com) to discuss any precautions necessary when building the kit if you feel unsure about what you are doing at any stage of the build.

Section 2

Mechanical Assembly

2.1 Overview

In this section we will prepare the mechanical aspects of the kit, mostly on the underside of the chassis.

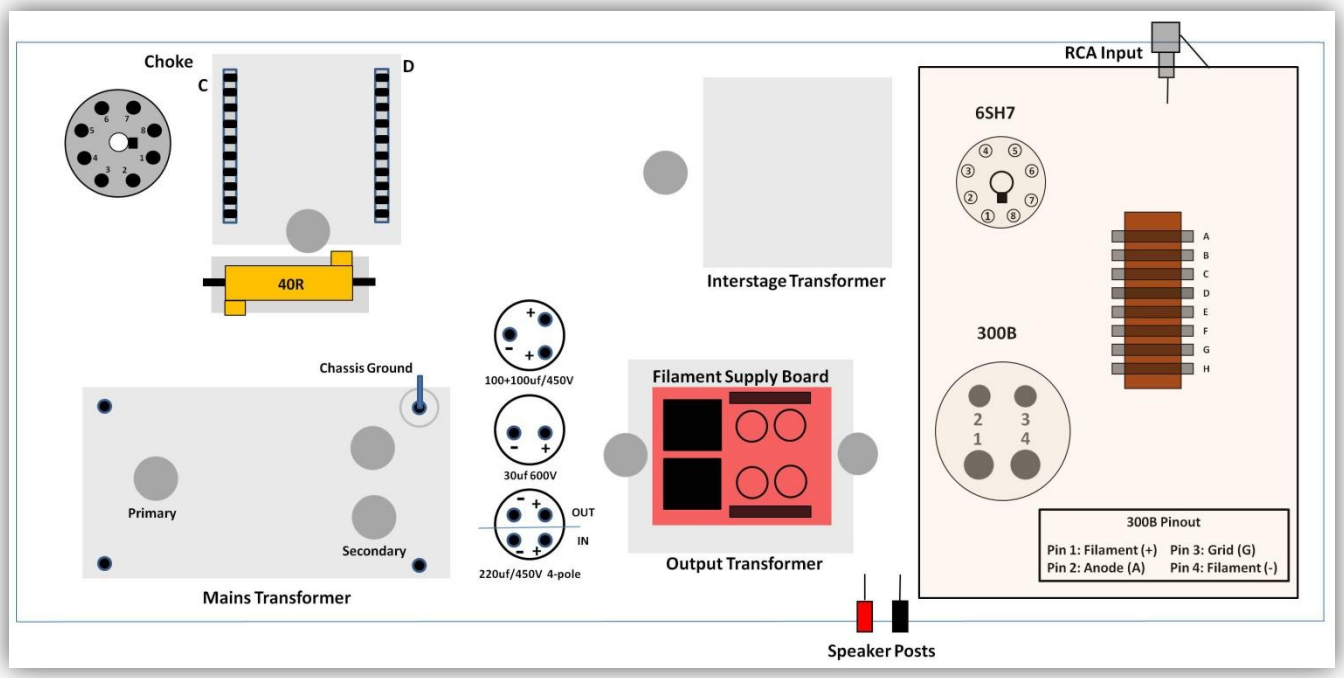

Let's start with the chassis and install the:

- rubber grommets
- 35mm clamps
- 8-pin valve base
- ceramic posts
- IEC and Rocker Switch
- Mills 40R resistor
- Hex standoffs

www.AudioNoteKits.com
audionotekits@rogers.com

2.2 Installing the Rubber Grommets

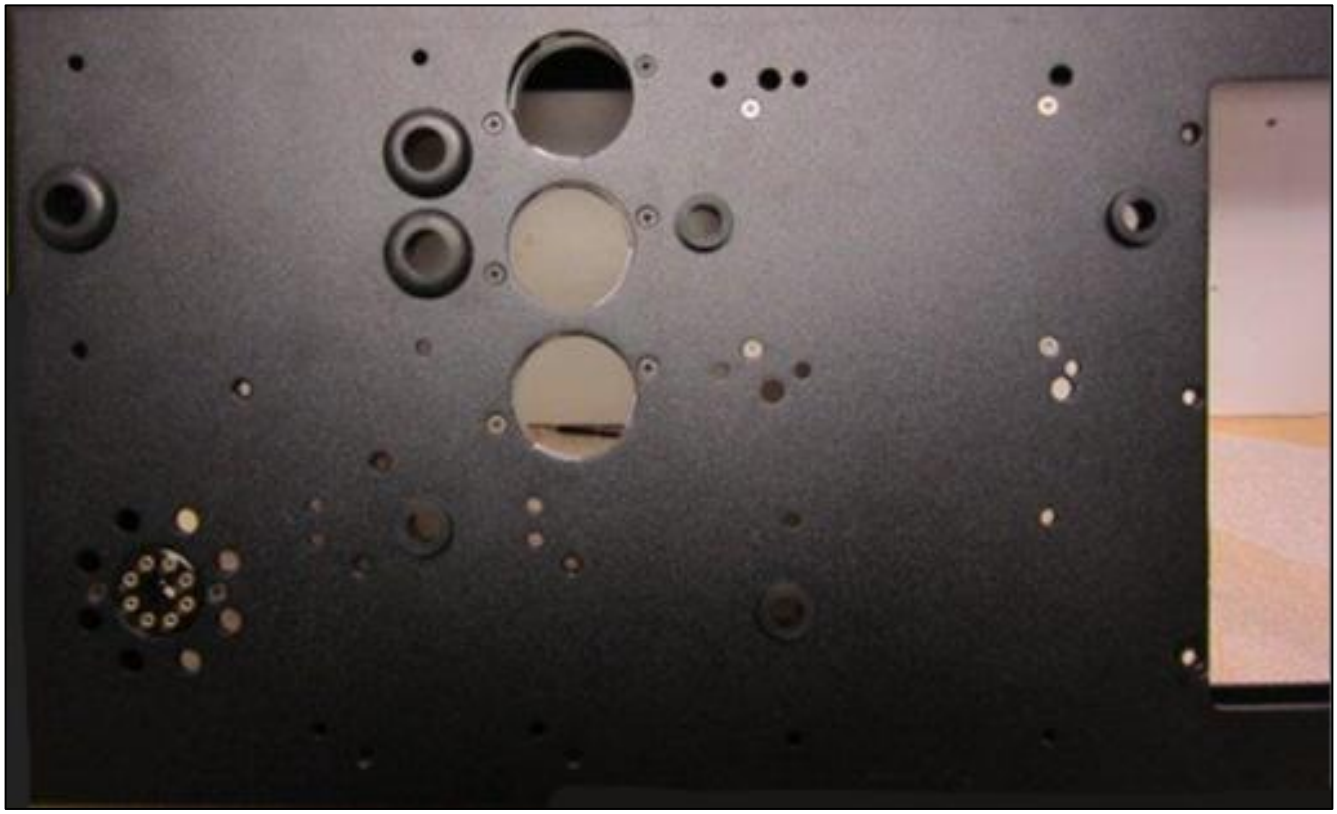

You'll find 3 large and 4 small grommets in your kit bag.

- ☐ Install the grommets in chassis. *Be careful not to use a sharp object to push them in – just use your hands and take your time. (You can push them from the underside of the chassis, if you find that easier.)*

www.AudioNoteKits.com
audionotekits@rogers.com

2.3 Installing the Clamps

- ☐ Next install the 3 35mm clamps that will hold the power supply capacitors. Position these under the chassis as shown and secure from the top with the M3 10m black flat or countersunk screws.

Here is the view from the underside of the chassis…

… and the view from the top of the chassis:

www.AudioNoteKits.com
audionotekits@rogers.com

2.4 Installing the Valve Base

Now we can install the Black 8-pin valve base for the rectifier tube. You can see the valve base in the top left corner of the picture below:

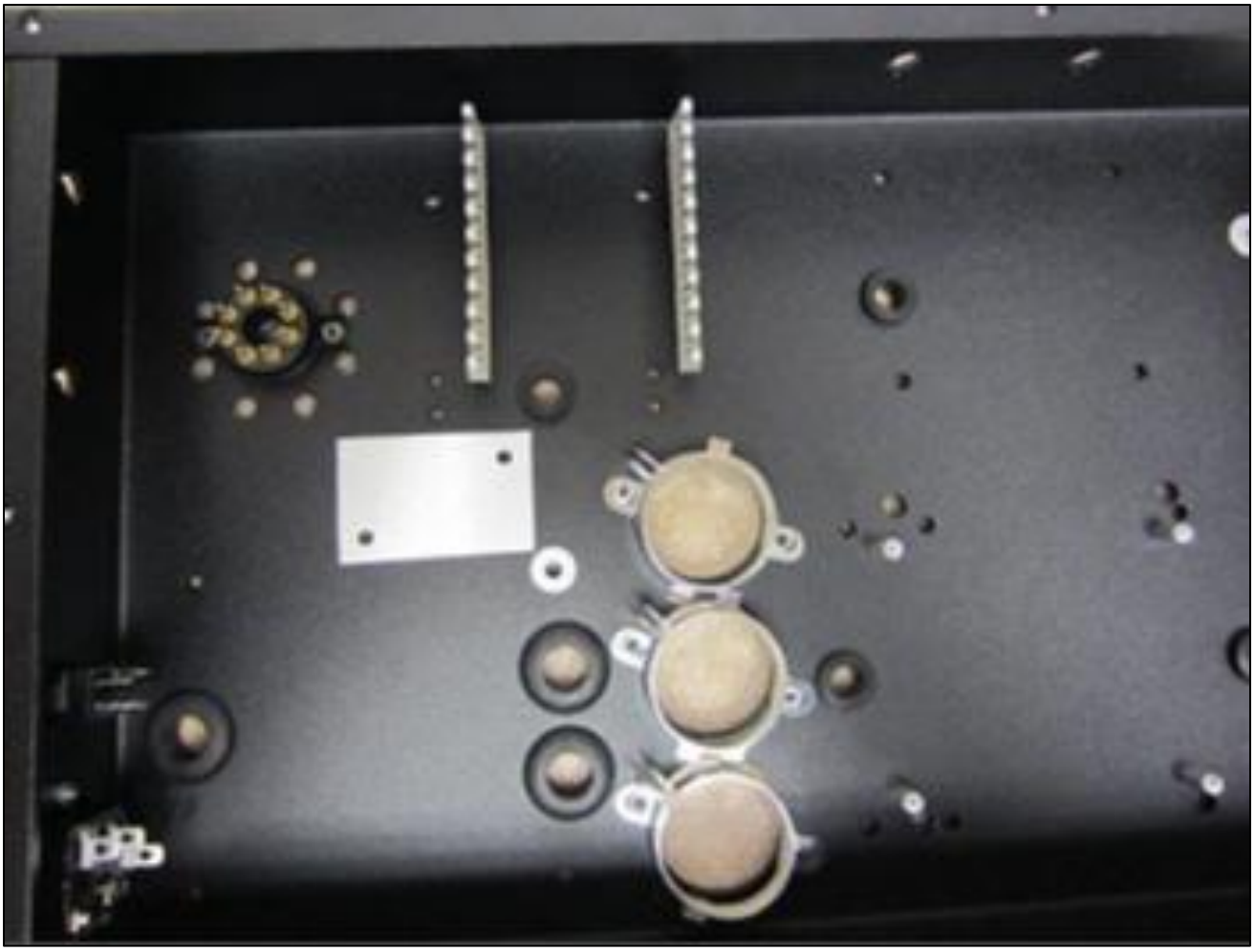

- ☐ Use the Black ring on the underside of the chassis to secure the valve base into position. *Ensure that the notch on the inside of the valve base is pointing toward the front of the chassis.*

www.AudioNoteKits.com
audionotekits@rogers.com

2.5 Installing the Ceramic Posts

The next picture shows the 10-position ceramic posts mounted into position.

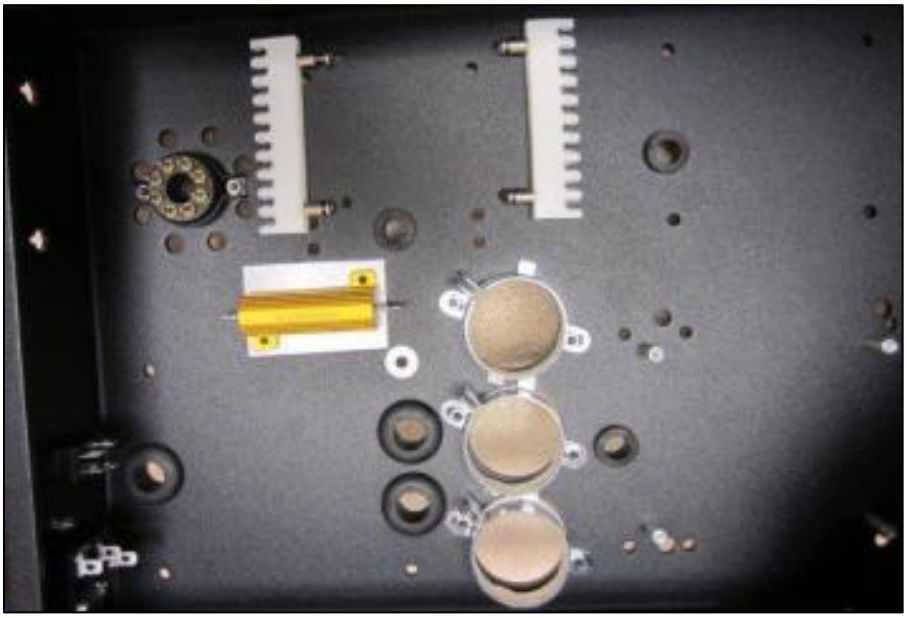

- ☐ Use 4 6mm steel M3 countersunk (flat) screws to mount the posts on the underside of the chassis, as shown.

Here are the posts actually mounted:

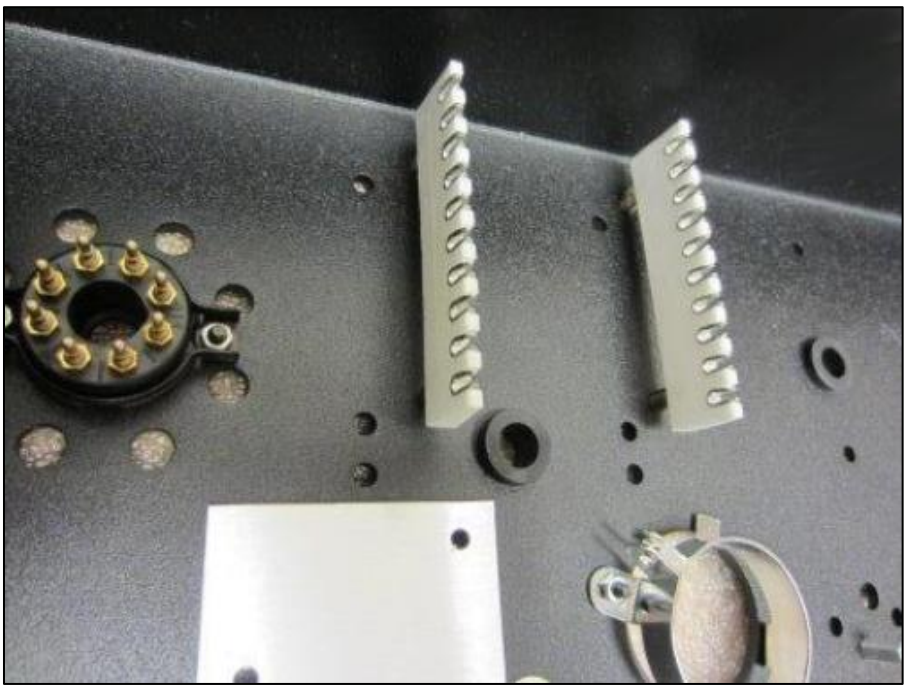

www.AudioNoteKits.com
audionotekits@rogers.com

2.6 Installing the IEC Socket and Rocker Switch

Now let's install the IEC socket and Rocker Switch to the back of the chassis. Have a look at the picture below for the correct orientation.[3]

- ☐ Install the Rocker Switch, which just snaps into position.
- ☐ Use M3 10mm CSK screws to Install the IEC socket; it can mount from inside the chassis or from the outside.

[3] Of course, the orientation isn't critical as long as the wiring is done correctly, but the orientation that is shown is what you'll see in the rest of the pictures and graphics in the manual so it's probably easier just to do it that way.

www.AudioNoteKits.com
audionotekits@rogers.com

2.7 Installing the Mills Resistor

- ☐ Position the 40 ohm Gold Mills resistor as shown below and secure with 2 x 10mm Black counter sunk screws from top of chassis.

www.AudioNoteKits.com
audionotekits@rogers.com

2.8 Installing the Hex Standoffs

We have one more mechanical install to do. We must position 4 10mm M3 hex standoffs which will allow us to mount the filament board later on; you'll find them in your hardware bag labeled "FILAMENT." These 4 hex standoffs are located to the right of 35mm clamps;

☐ Use these standoffs and screws and install them in the chassis, as shown below:

Here's another view, from the top of the chassis:

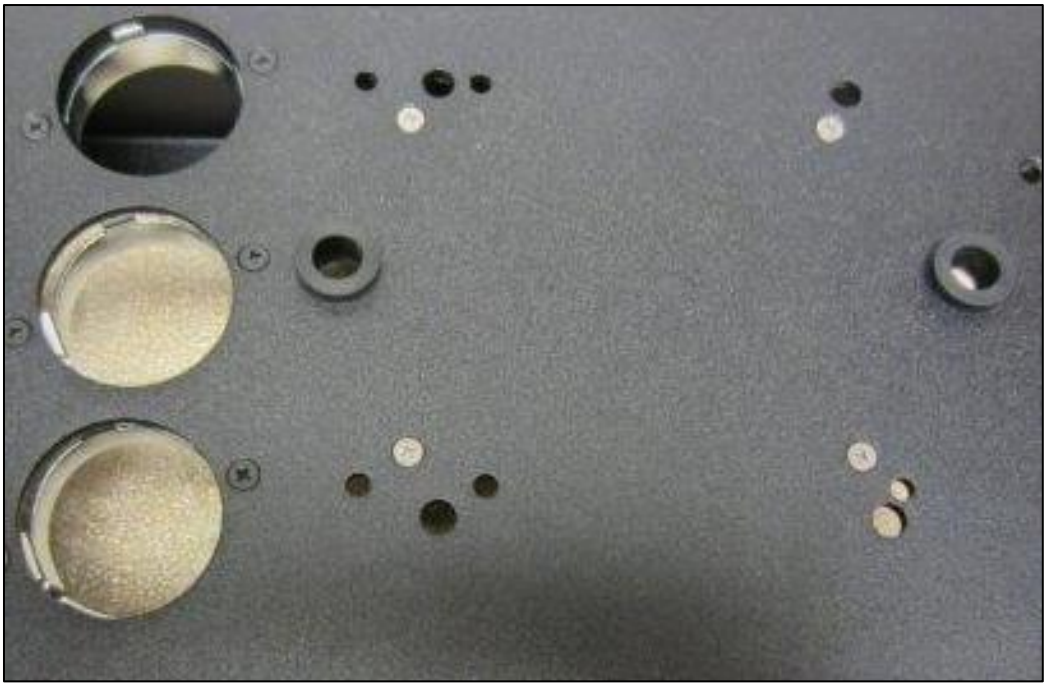

www.AudioNoteKits.com
audionotekits@rogers.com

Congratulations!

The chassis is now prepared for the rest of the build.

Time for a break!

www.AudioNoteKits.com
audionotekits@rogers.com

Section 3

Installing the Transformers

3.1 Overview

In this section we will install the transformers. We have 4 transformers to mount:

- T-195 Mains (Power) Transformer
- CH-170 Choke (for the Power Supply)
- IN-500 Interstage transformer
- OP-300 SET 300B Output transformer)

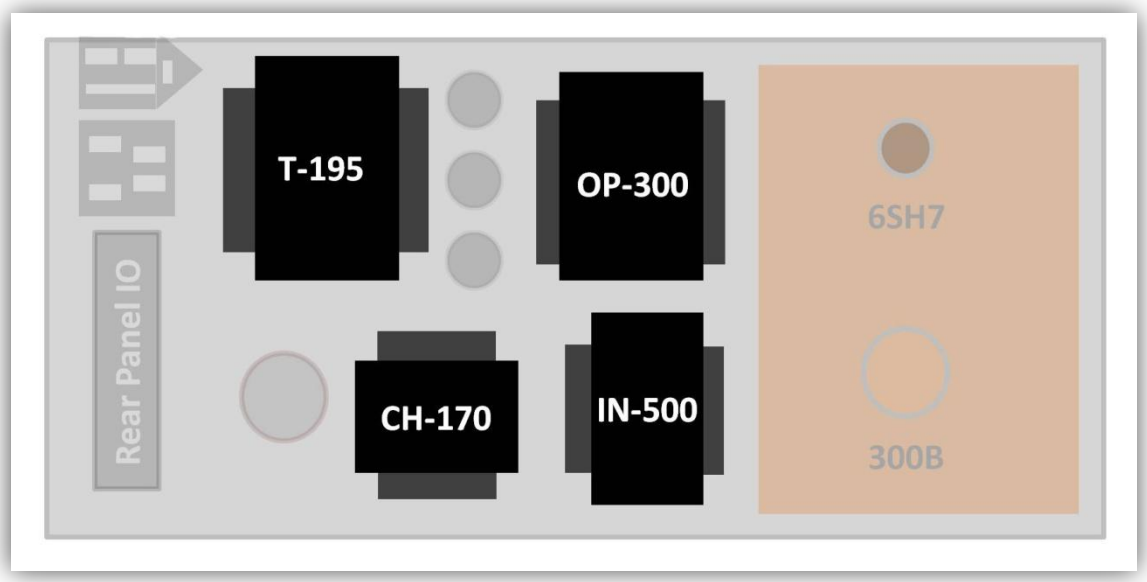

It's a good idea to read through this whole section prior to starting to so you have a good idea of what is coming!

www.AudioNoteKits.com
audionotekits@rogers.com

3.2 Installing the Mains Transformer

Let's start with the Mains transformer.

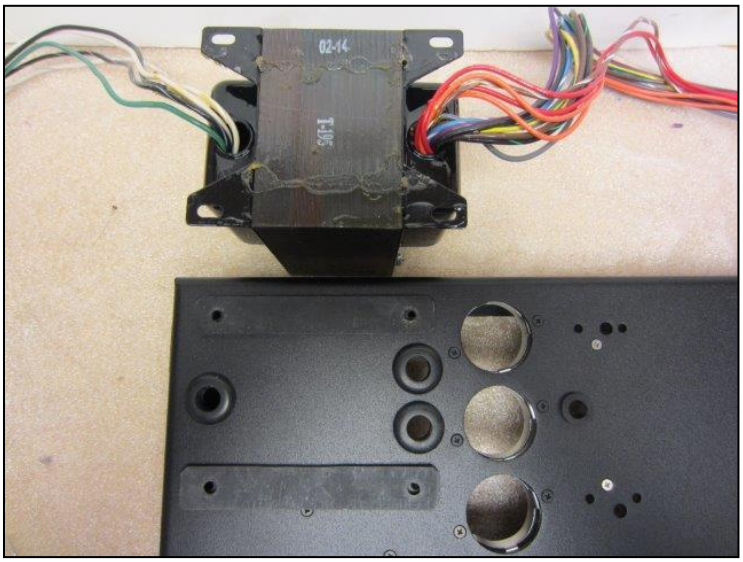

As you can see above the Mains transformer is mounted in the position where the three large grommets are located. The side with the White, Black, and Green wires is the Primary and positions to the single grommet side; the other side with Red, Orange, Blue (and other color) wires is the Secondary and positions to the two grommet side.

- ☐ Position the transformer upside down and beside the chassis, as shown above. Lay down the two rubber strips from your kit bag onto the chassis.
- ☐ Start feeding the wires through the chassis as shown below.

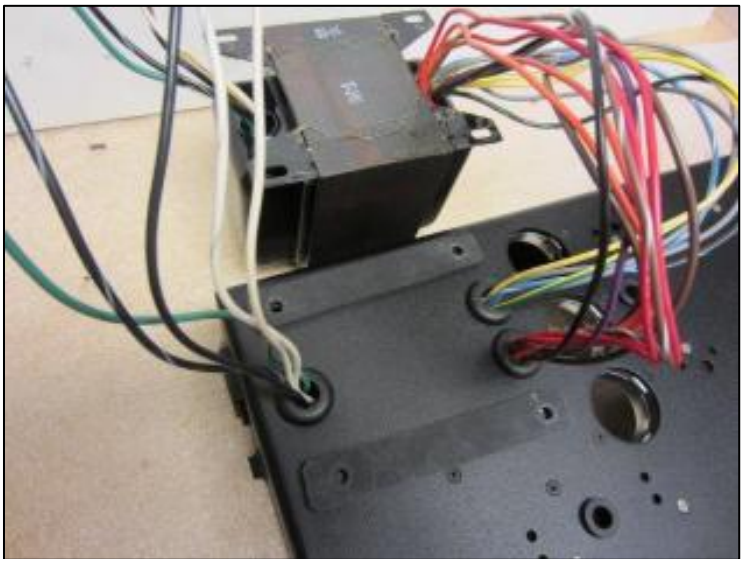

www.AudioNoteKits.com
audionotekits@rogers.com

On the Secondary side it does not really matter which wires go through which of the two grommets, but my suggestion would be to divide them up equally such that when the transformer is in its proper position that wires on one side are not having to stretch way over to the other hole. Start feeding the wires once you have made this distinction.

While the Primary wires can be threaded through the grommet hole quite easily, the Secondary wires will need a little help: we suggest you give them a light spray with WD-40 so that they can slide through the grommet hole a little easier. Once all the wires are fed through you can use a cloth to wipe off any excess WD-40 spray.

Here's a view from the underside:

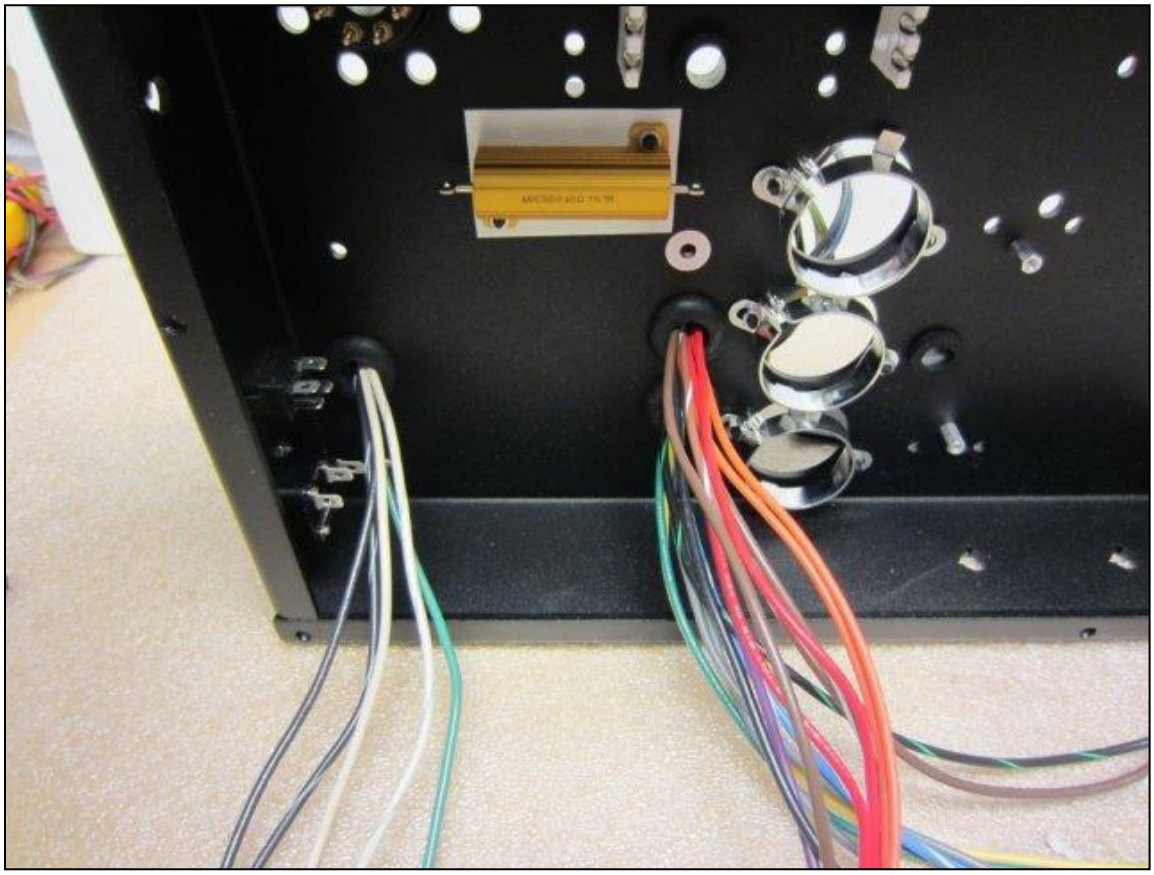

Once you have fed the wires through (loosely) you can stand the chassis on its side:

www.AudioNoteKits.com
audionotekits@rogers.com

You can do it alone but it would'nt hurt to have a second set of hands for this next bit. You will probably have to re position the rubber strips back under the chassis as you continue to move the transformer into position; this is the toughest of the four so take your time and be patient!

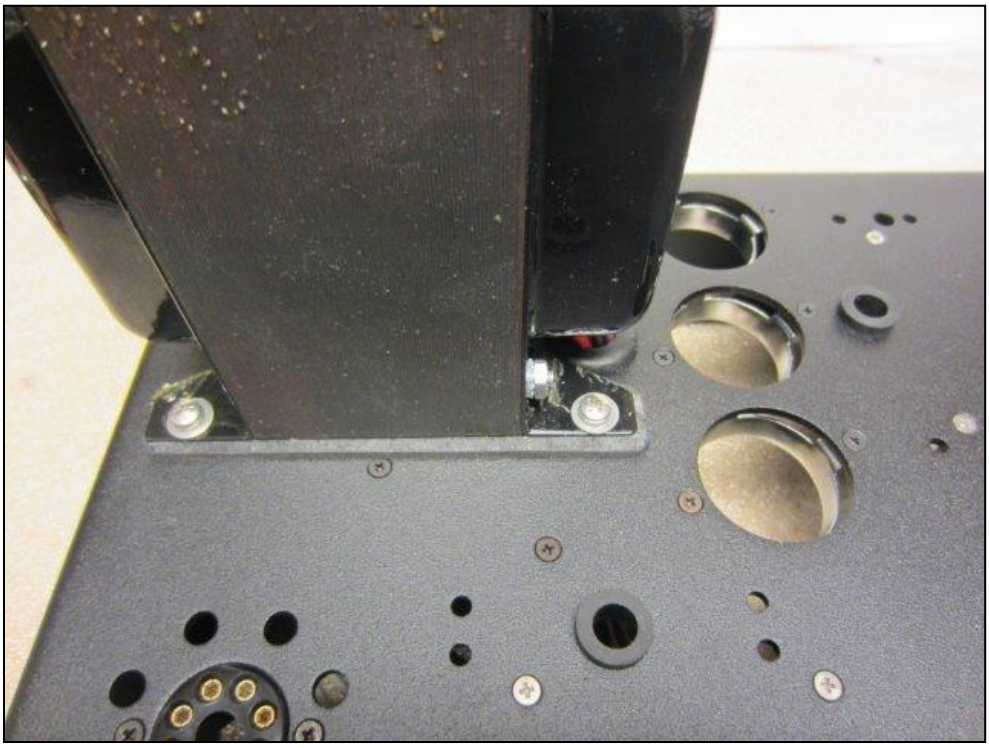

www.AudioNoteKits.com
audionotekits@rogers.com

Here is the transformer positioned

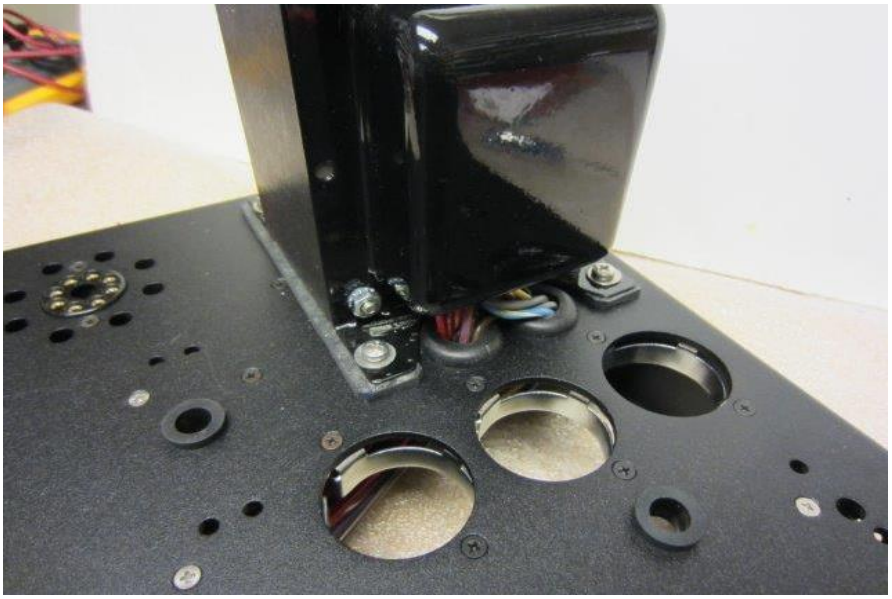

- ☐ Line up the transformer as shown above and, using the M4 16mm pan head screws and washers, secure it into position. The washer goes on the top of the chassis and the M4 serrated washer on the underside of the chassis.

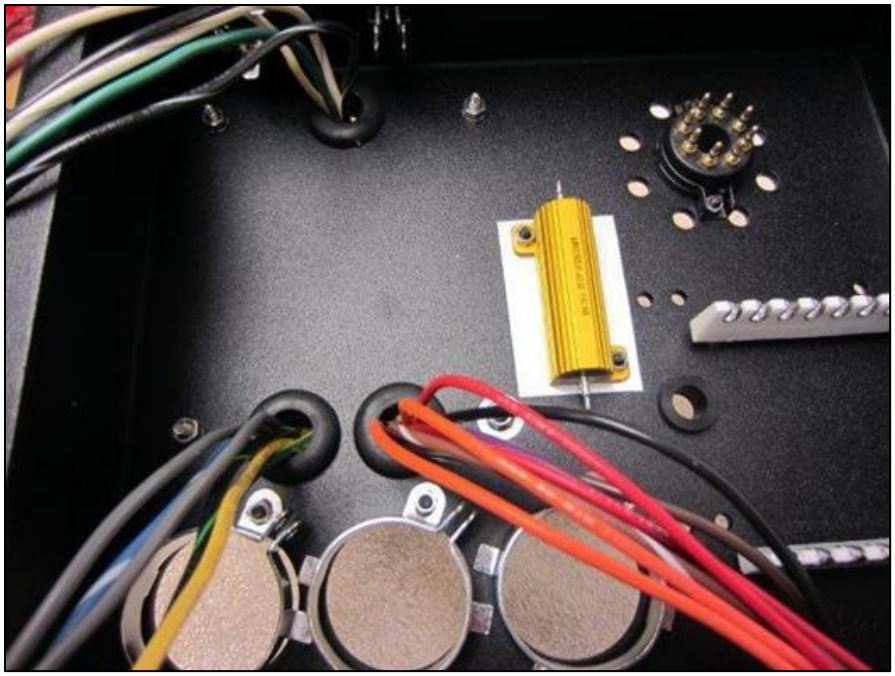

Here a view from the underside

www.AudioNoteKits.com
audionotekits@rogers.com

The picture below shows the position that we will be working on for most of the kit.

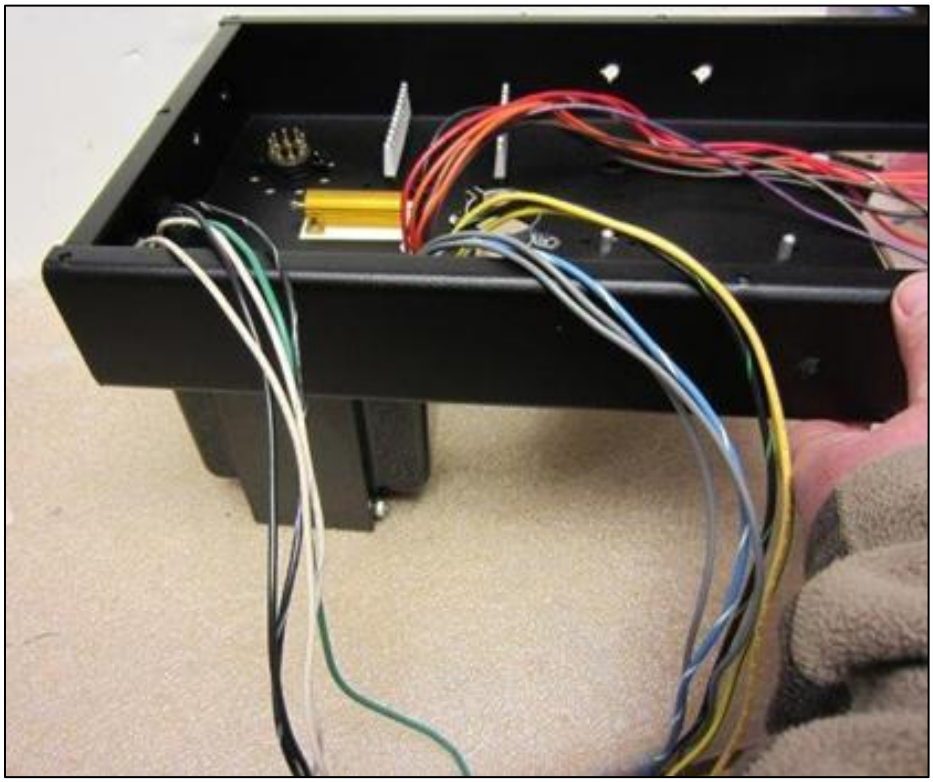

Well done! Things should get a bit easier from this point on.

www.AudioNoteKits.com
audionotekits@rogers.com

3.3 Installing the Choke

Now let's attach the CH-170 Choke to the chassis.

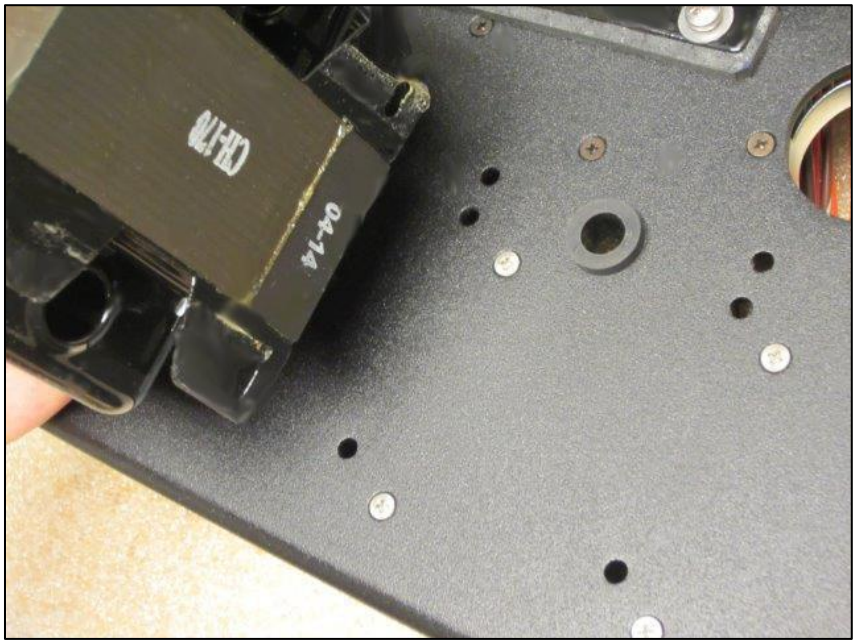

- ☐ Feed the two Black wires through the grommet hole and then use the M4 Pan 10mm screws to secure it into place.

Below you can see the Choke mounted and the next transformer being readied.

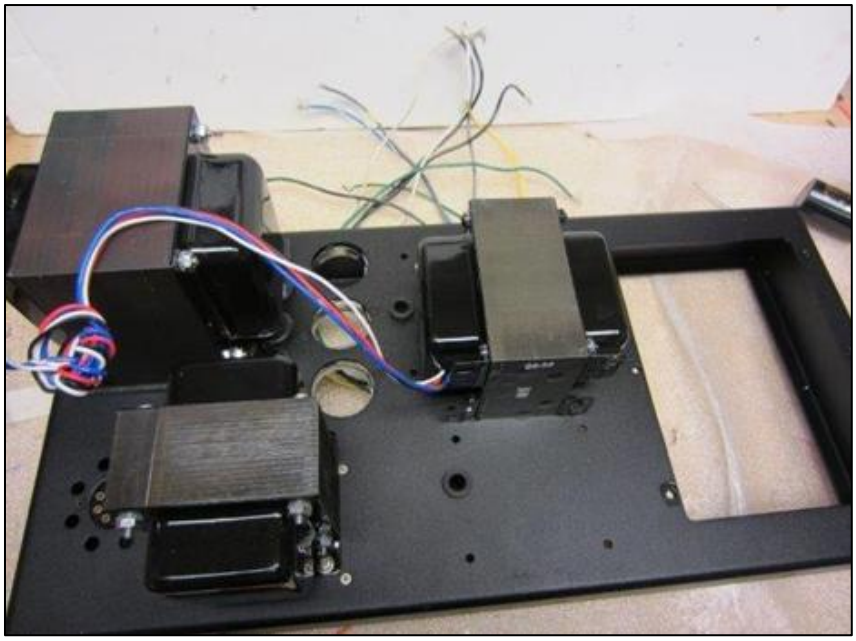

www.AudioNoteKits.com
audionotekits@rogers.com

3.4 Installing the Interstage Transformer

The IN-500 Interstage Transformer is the next to be installed.

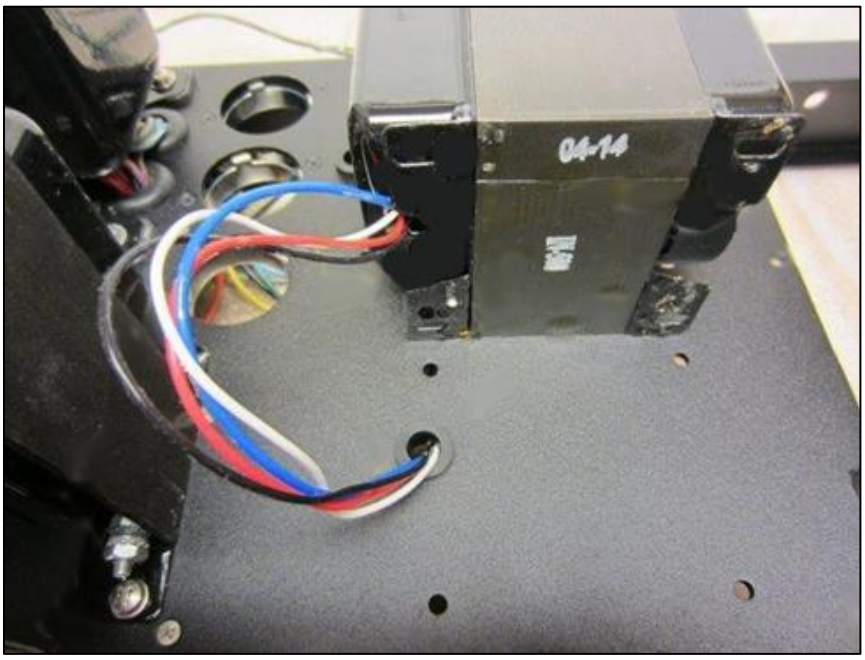

- ☐ Feed the wires through the grommet hole as shown and then use the M4 Pan 10mm screws to secure it into place.

www.AudioNoteKits.com
audionotekits@rogers.com

3.5 Installing the Power Supply Capacitors

Prior to the installation of the output transformer we are going to install the three power supply capacitors.

Here is the top view. The three capacitors that we'll install are, starting from the edge of the chassis:

- Mundorf MLytic 220uf 450V 4-pole capacitor[4]
- Cornell Dubilier 30uf 600V capacitor (non-polarized)
- Mundorf MLytic 100+100 450V capacitor (two capacitors in one)

☐ Use the M3 16mm pan head screws and nuts to tighten the capacitors into position. Make sure all the capacitors are flush where they meet the chassis: as you can see they are all slightly different heights. The 35mm clamps are a bit tight but you should be able to secure the caps into position as shown.

[4] This 4-pole electrolytic capacitor has an input (IN) and an output (OUT), each with a POSITIVE and NEGATIVE lead. To see how it is connected in the circuit, have a look at the Power Supply schematic.

www.AudioNoteKits.com
audionotekits@rogers.com

Here is the bottom view; line them up as you see in the picture and the wiring graphic below. The middle capacitor is non-polarized.

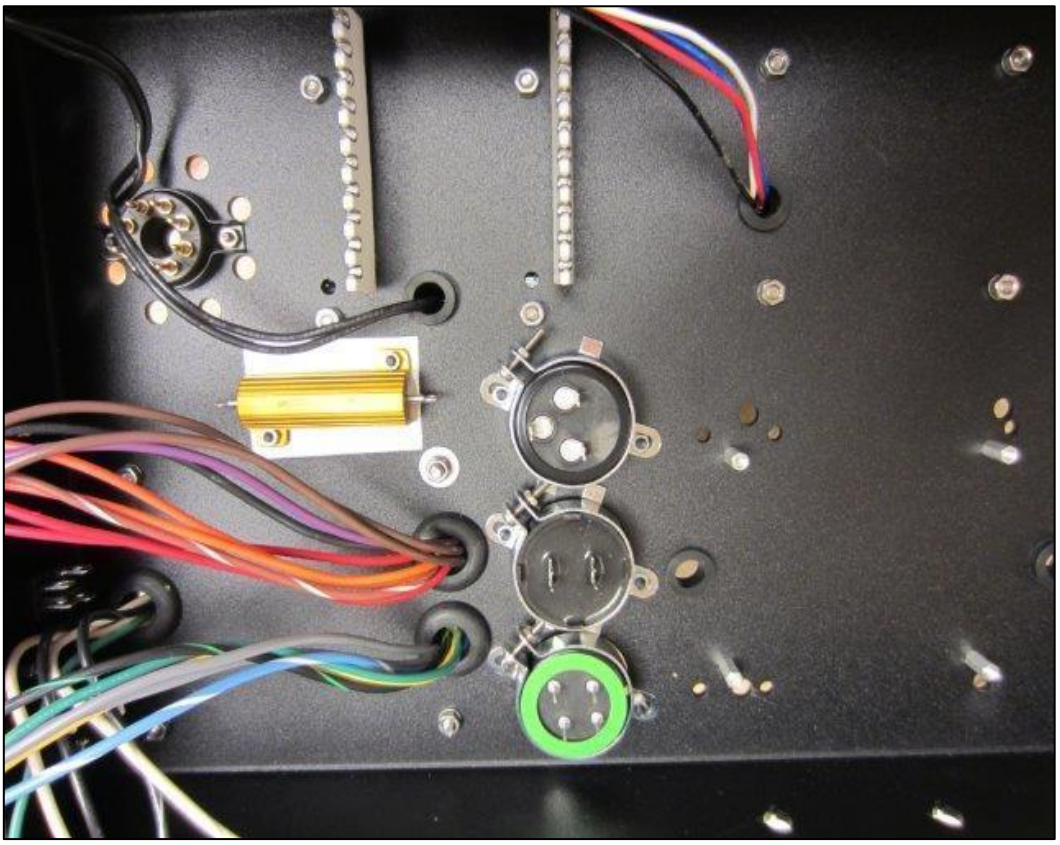

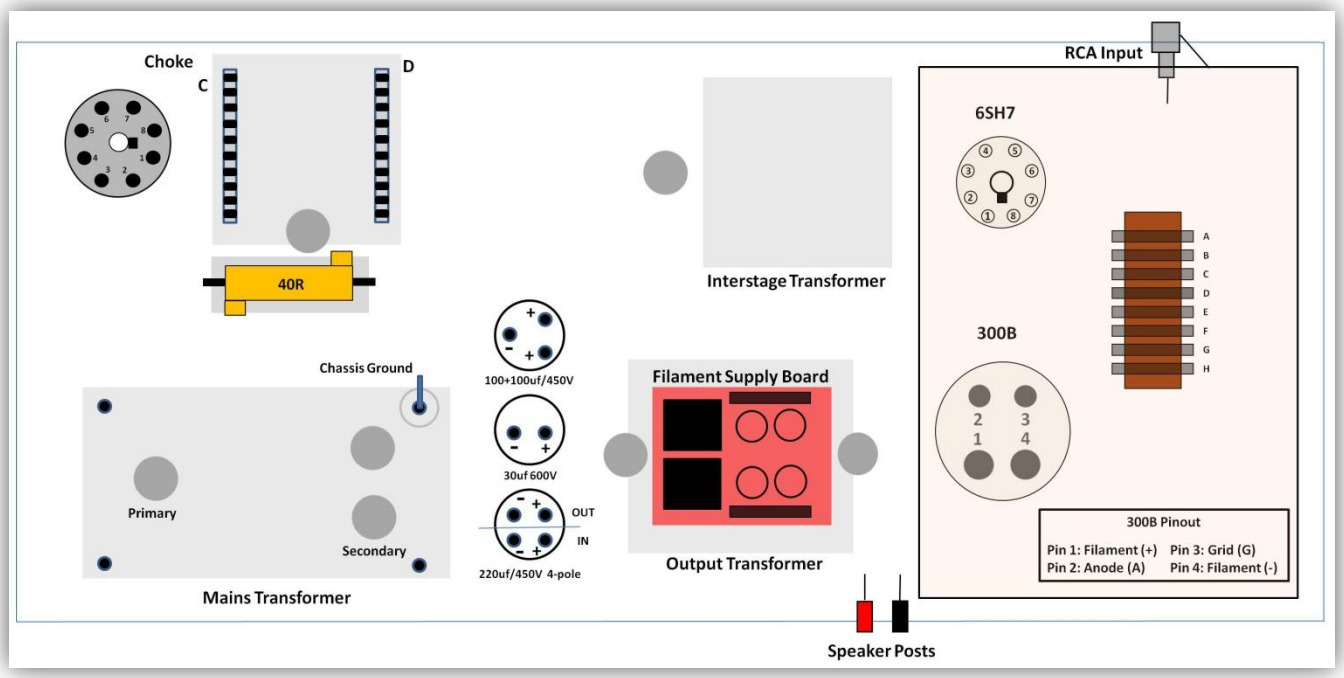

www.AudioNoteKits.com
audionotekits@rogers.com

3.6 Installing the Output Transformer

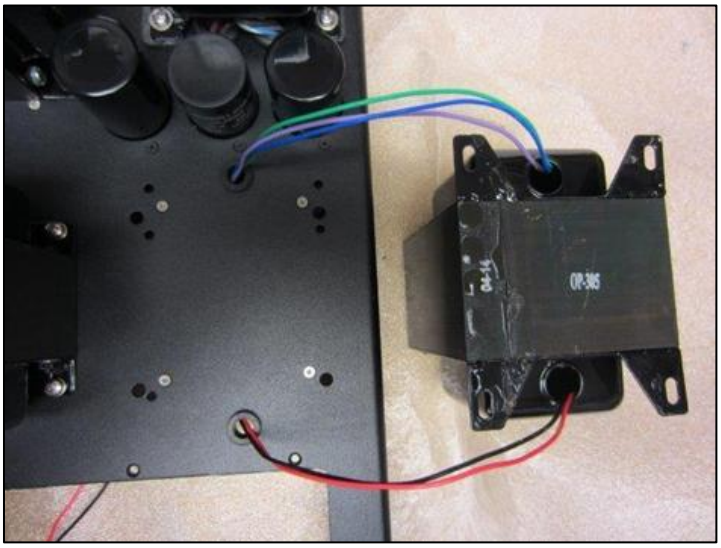

The Red and Black input (Primary) wires go through the hole nearest the front of the chassis. The Green, Blue, and Purple output (Secondary) wires want to be closest to the capacitors. Here is the position of the Output Transformer:

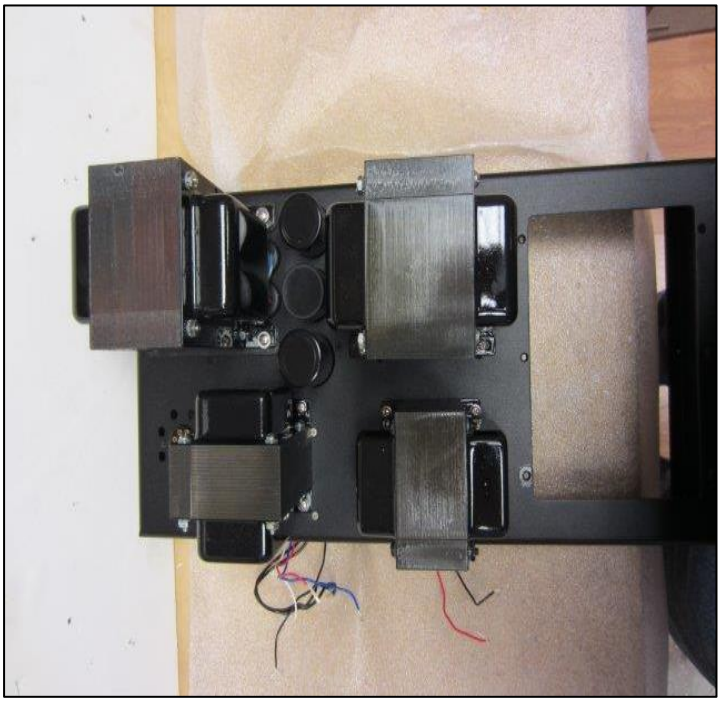

☐ Secure the Output Transformer as shown above.

Phew! Congratulations on completing the Transformer installation section.

www.AudioNoteKits.com
audionotekits@rogers.com

Another cup?

www.AudioNoteKits.com
audionotekits@rogers.com

Section 4

Power Supply Wiring

4.1 Overview

Now that the mechanical assembly is taken care of and we've installed the transformers, we'll position the amplifier as shown below and start working on the internal wiring of the Power Supply. This is basically the entire part of the chassis that you see here!

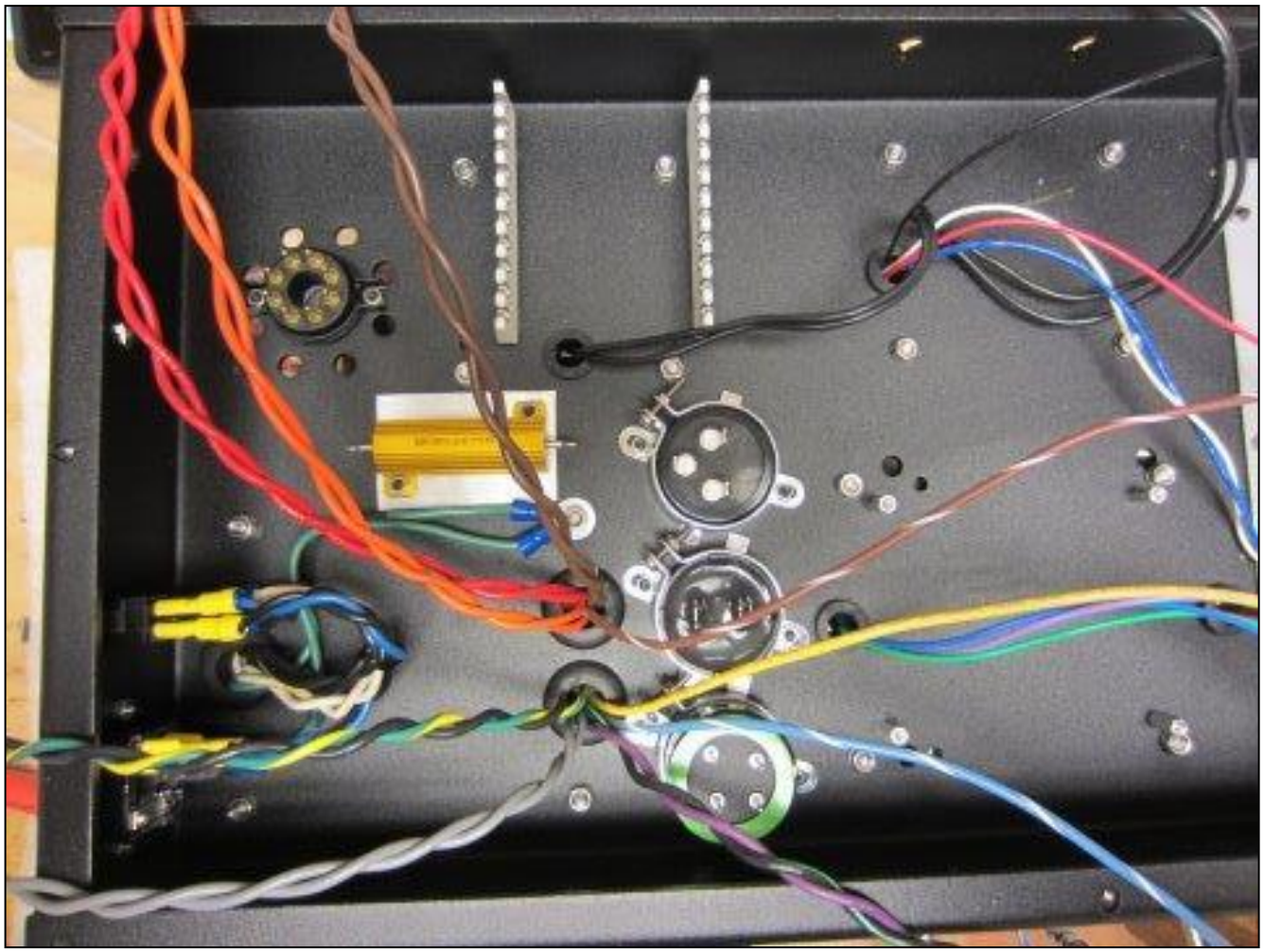

As we move forward with the wiring, there will be pictures and graphics in the manual to guide you. There are also higher definition pictures and graphics you can refer to in the separate Interstage Wiring Guide in .pdf format on your disk.

www.AudioNoteKits.com
audionotekits@rogers.com

If you really value how your amplifier will look inside, you should take your time and consider how to route the many wires that will connect the transformers, choke, ceramic posts, and the chassis mounted resistor and capacitors. Here's a really nice build that might serve as a guide:

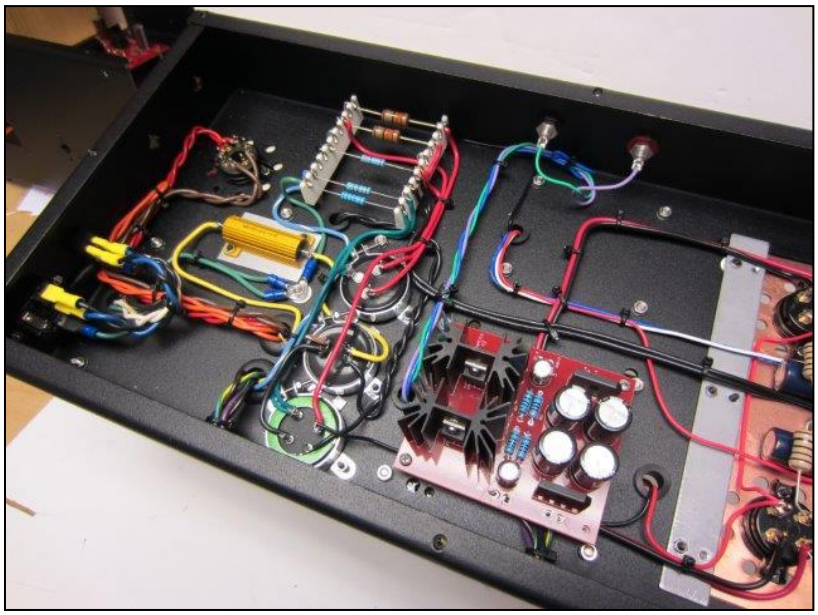

Note how the wires are grouped, bound with cable ties, routed in a thoughtful and neat manner. It's not only beautiful but, should the need ever arise, it will make troubleshooting so much easier.

Here's a picture of the underside of a nice parallel Legend build: there are circuit differences between this and the Interstage 300B, but there's enough similarity to make it worth looking at. Note again how to wires are grouped and cable-tied, how neatly the capacitors are attached to the tag strip, etc.

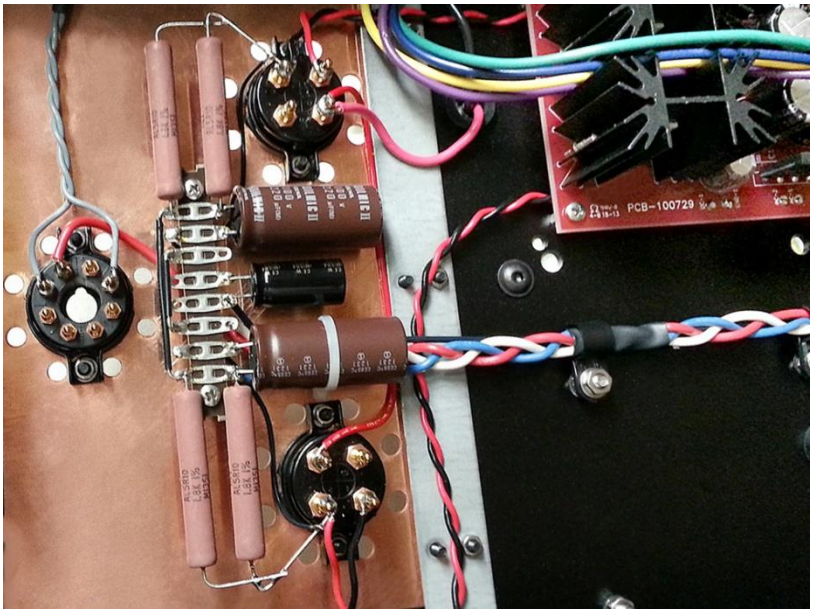

www.AudioNoteKits.com
audionotekits@rogers.com

A good first step is to twist the Mains transformer Secondary wires together in groups according to how they are going to be used. Here's how the Mains wires are colored:

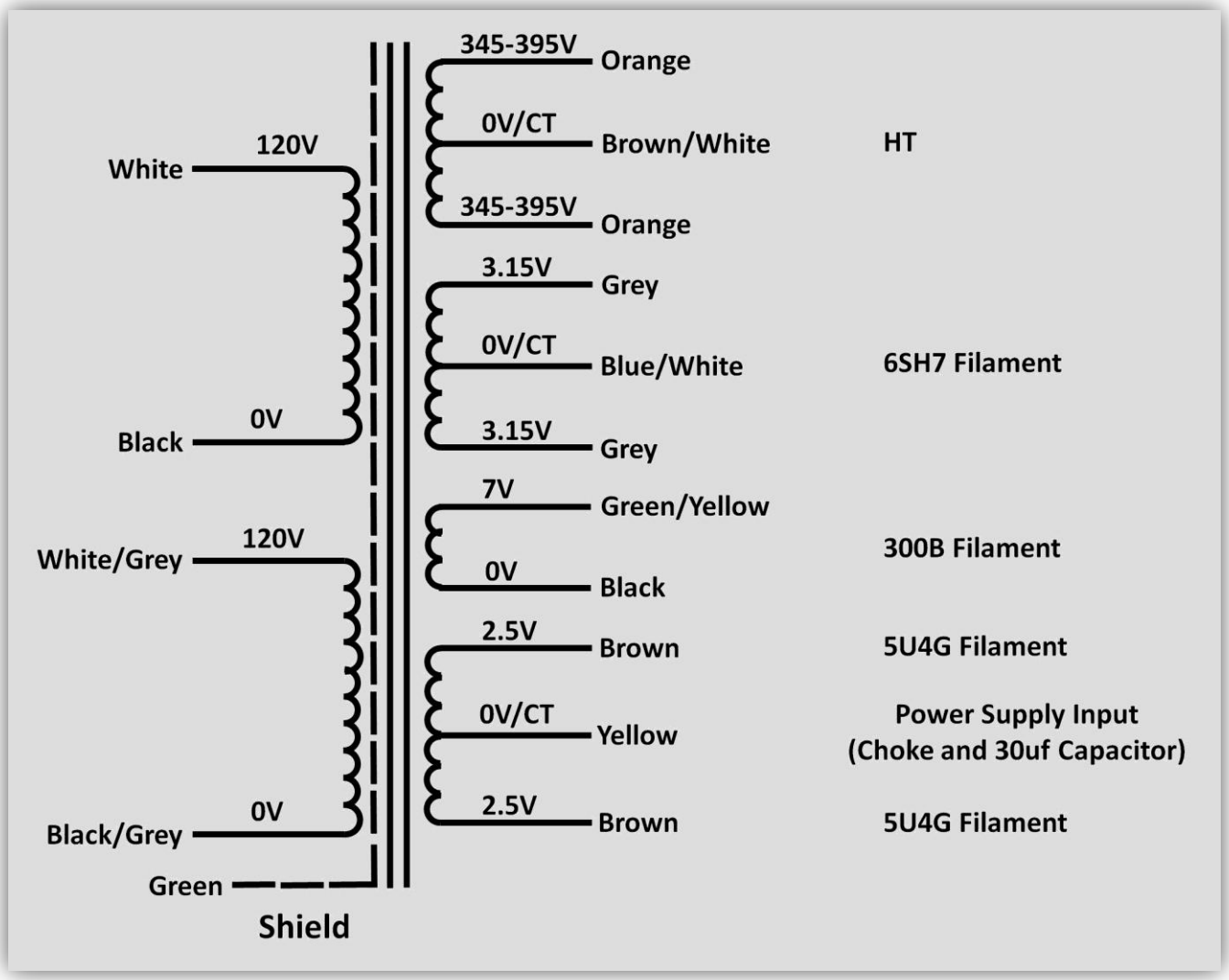

So, for example, twist together the Orange wires of the HT, the Grey wires of the 6SH7 Filament, the center tap (CT) wires, etc. This will help keep us organized as we proceed.

www.AudioNoteKits.com
audionotekits@rogers.com

Here's a look from the underside:

+

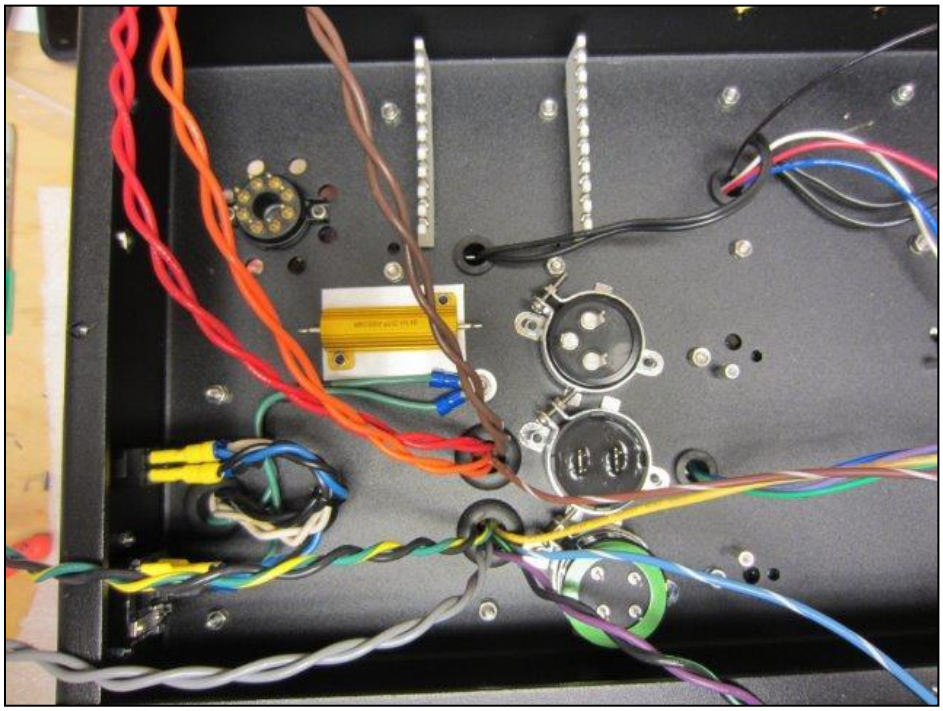

4.2 Preparing the Chassis Ground

Our first task is to take the Green wire from the Mains Primary and connect it to the Chassis Ground (the unpainted Mains transformer screw).

- ☐ Extend the wire past the Chassis Ground, then strip and tin the wire.
- ☐ Add a lug to the tinned wire and then solder the lug onto the wire. Do this by adding solder through the front of the lug, as shown below.

www.AudioNoteKits.com
audionotekits@rogers.com

We are now going to add two more prepared cables from the IEC bag to the Chassis Ground.

- ☐ Take the prepared Green wire with a crimp on one end and a lug on the other end and connect the crimped end to the GND post of the IEC socket, as shown below.

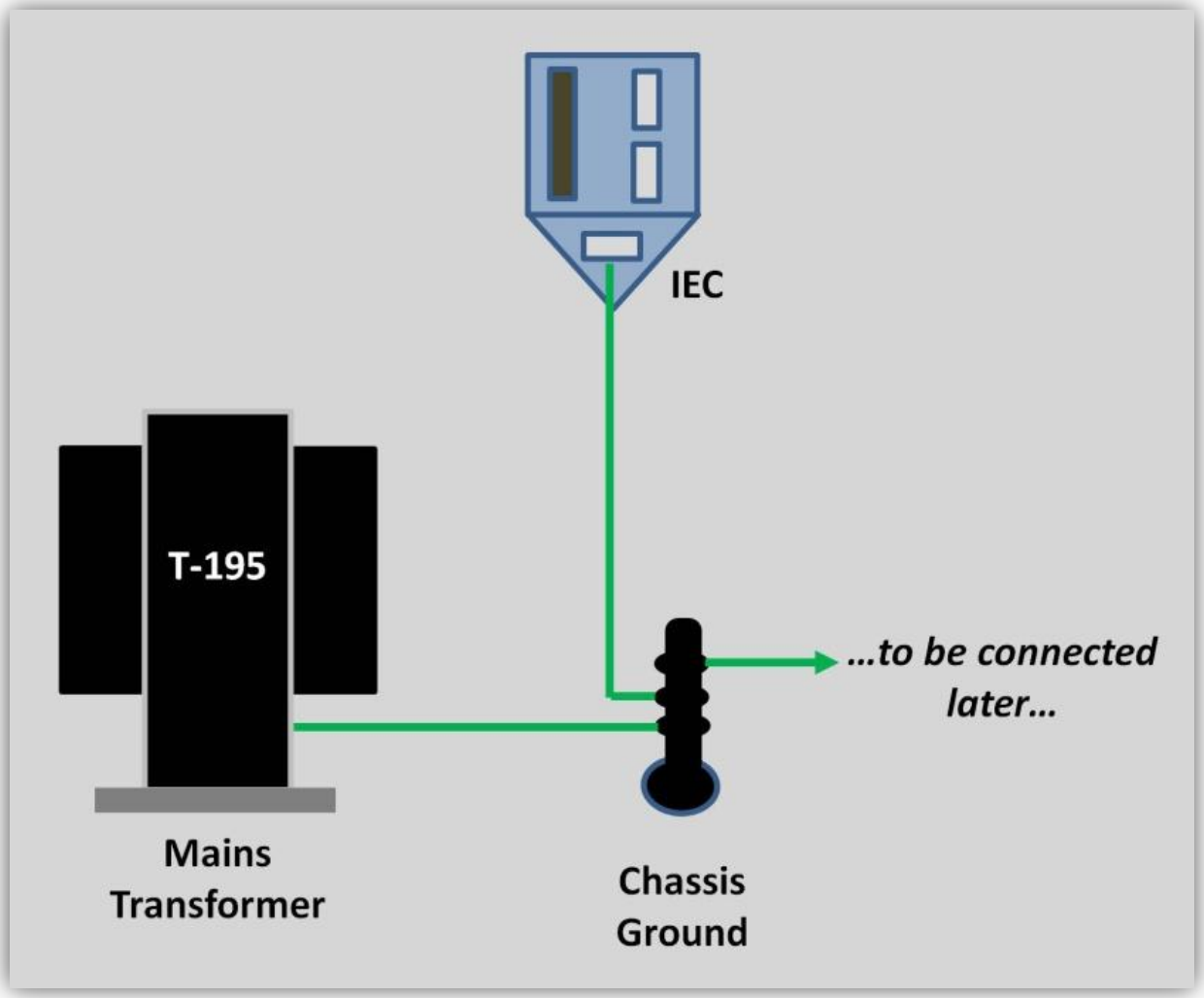

- ☐ Take the following 3 wires and position them on the Chassis Ground:

  - The Green wire from the Mains that you added a lug to above.
  - The lug end of the wire now attached to the IEC GND.
  - The other prepared Green wire with just a lug on it. Tin the other end now: it will be used later for the Power Supply Ground.

- ☐ Add a nut and gently tighten. We may be moving the wires a little later so there's no need to tighten it too much!

www.AudioNoteKits.com
audionotekits@rogers.com

Here's what it should look like:

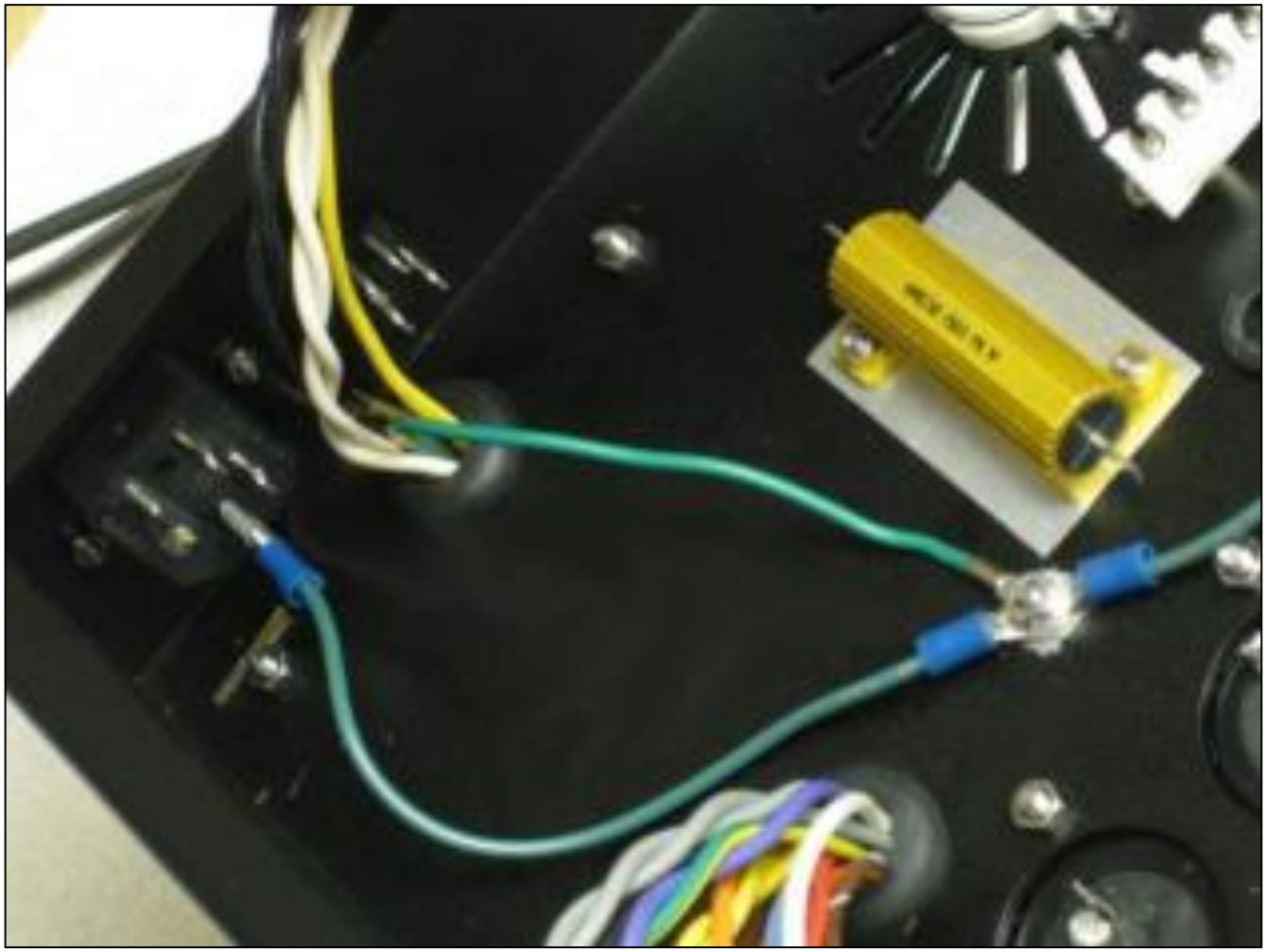

www.AudioNoteKits.com
audionotekits@rogers.com

4.3 Wiring the IEC, Rocker Switch and Mains

Let's have a look at how we're going to do this:

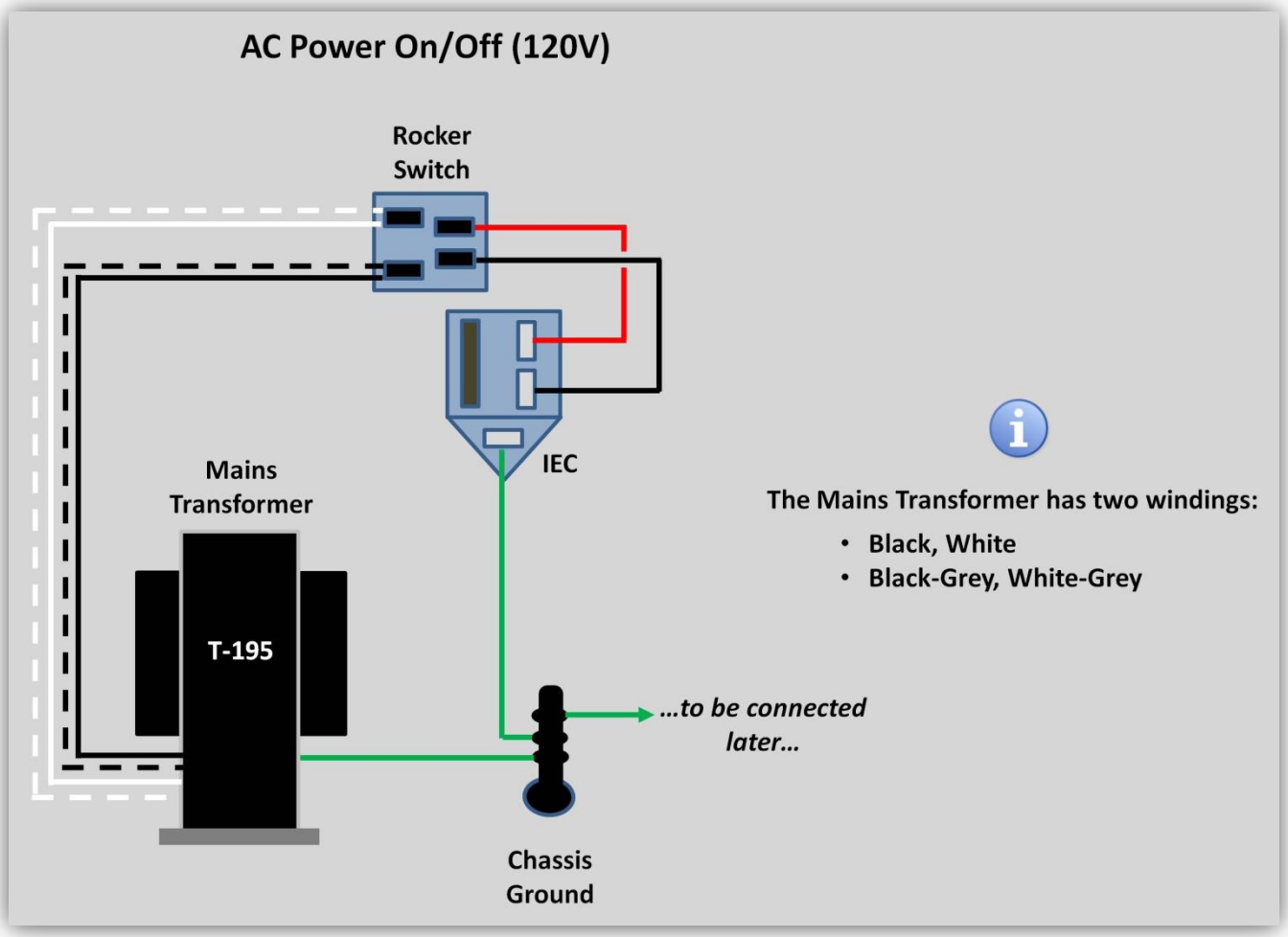

We've provided a number of pre-made cables and parts for this section to make it easier and neater:

- 2 crimps
- Heatshrink
- Red/Black twisted cable with crimps

For 120 V operation, take the twisted White/White-Grey and twisted Black/Black-Grey pairs of wires coming from the Mains.

Let's start with the White/White-Grey pair:

Have a look at the step below, then consider this tip. You may want to trim the tinned wire to the desired length and then place the crimp over the tinned bare wire. If it doesn't fit try smoothing out the tinned wire with soldering iron then add some solder in the hole showing: use a fine-tipped soldering iron and make sure the solder "takes" such that the solder is shiny and the wire has accepted the solder.

- ☐ Cut these wires[5], strip the ends off, twist the two ends together, tin them, add a crimp to the end, solder the wires onto the crimp, and then install the heatshrink ( )

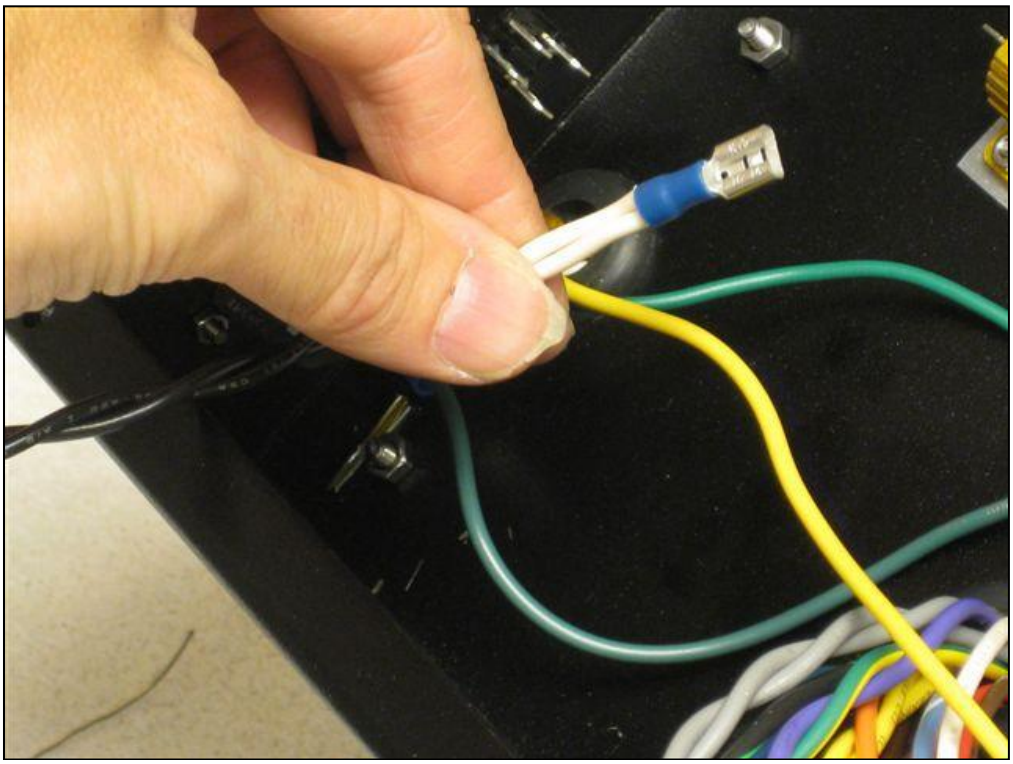

- ☐ Similarly, prepare the Black/Black-Grey pair.
- ☐ Push the crimped White/White-Grey and Black/Black-Grey Mains Primary wires that you've just prepared onto the wider spread lugs of the Rocker Switch, as shown in the graphic above.
- ☐ Take the prepared Red/Black twisted cable and complete the connections as shown in the graphic.

[5] Leave about 5 inches of twisted White/White-Grey wire, at least.

www.AudioNoteKits.com
audionotekits@rogers.com

4.4 Wiring the 8-pin Valve Base

Let's begin by wiring up the 8-pin valve base.

- ☐ Tie off the Red pair of wires. We won't be using them; they're used for the parallel 300B build.
- ☐ Take the Orange twisted pair and put heatshrink on the ends so that they do not interfere with anything else.
- ☐ Connect the Orange wires to pins 4 and 6 of the 8-pin valve base, as shown below It doesn't matter which Orange wire connects to which pin as it's the AC HT input to the 5U4G rectifier tube.

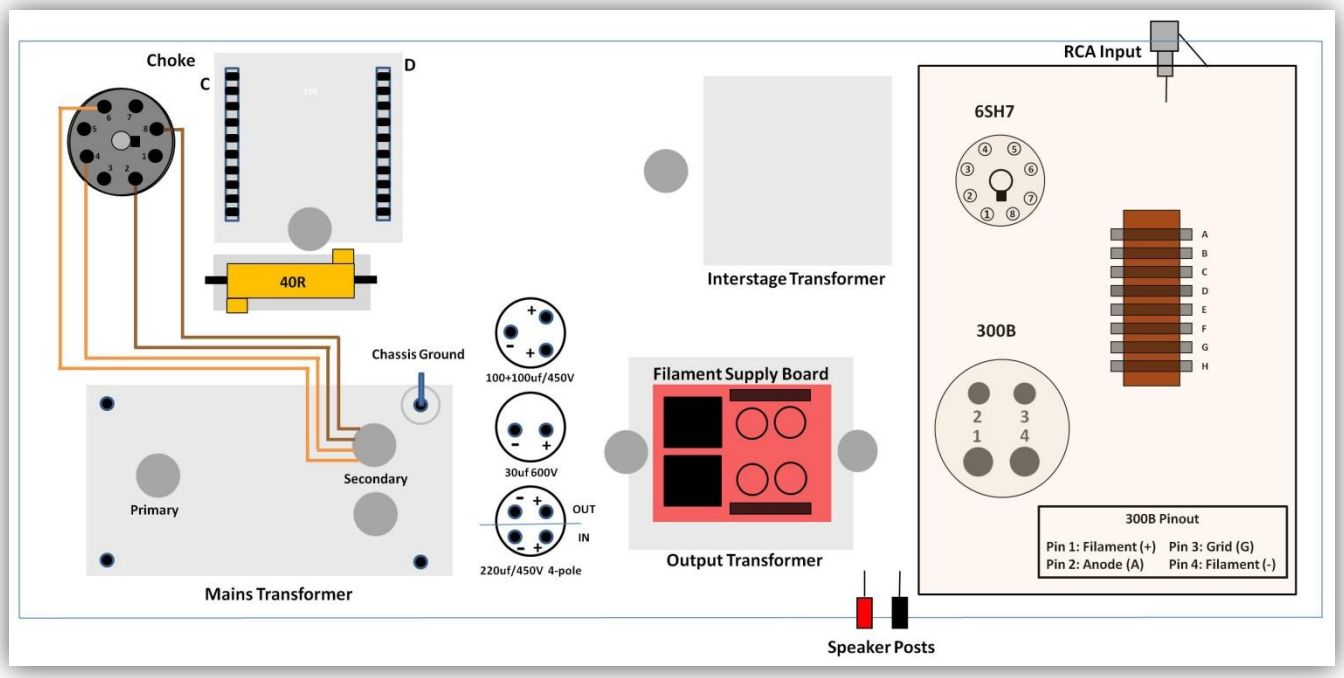

- ☐ Similarly, put heatshrink on the ends of the Brown wires and connect them to pins 2 and 8 of the 8-pin valve base, as shown below. Again, it doesn't matter which Brown wire connects to which pin; these are 5V filament supply wires.

www.AudioNoteKits.com
audionotekits@rogers.com

4.5 Wiring the Ceramic Post Resistors and Capacitors

Next we'll install the supplied resistors onto the Power Supply 10-position ceramic posts.

Here's a picture; you can zoom in to see the resistor color code:

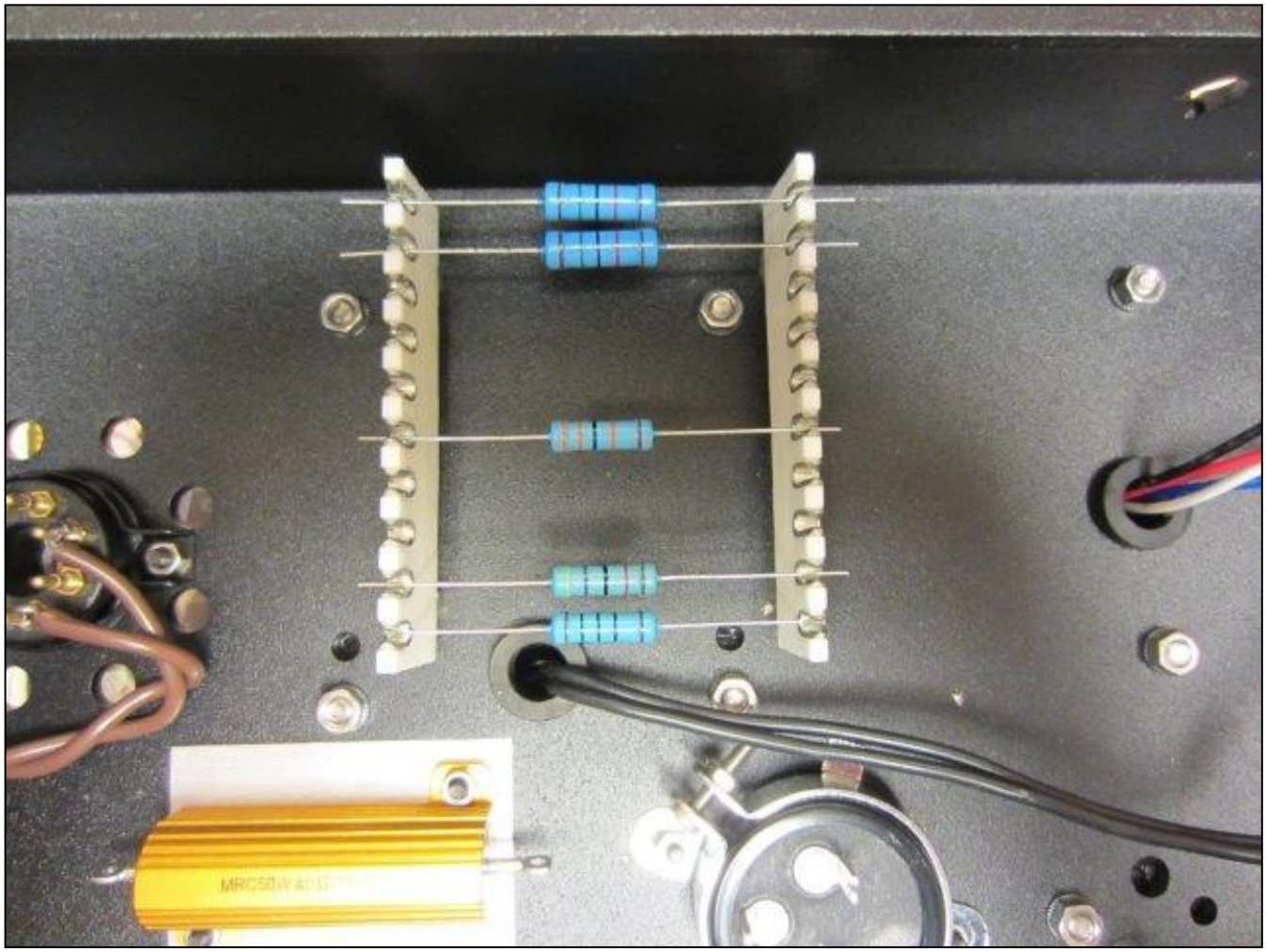

Normally (throughout the manual), when we say "connect" we mean "position the wire and solder." However, in this section we recommend that you don't solder resistors or wires to the ceramic posts and capacitors until specified as, in a number of instances, we'll be adding more wires to them and it's neater to solder more than one wire to a ceramic post or a capacitor lug at the same time. In this section, then, "connect" means "position the wire" and we've indicated when to "solder." But, if you prefer, you could solder the first connection and then add additional wires after. In any event, if you get to the end of this section and you find anything still not soldered, you should solder it. And, please let us know if we've missed something or messed up, so we can update the manual. Thanks.

www.AudioNoteKits.com
audionotekits@rogers.com

Let's see what we have. Looking at the picture, from the top to the bottom we have:

- 2 15K resistors at the top. These two resistors are used to step down the rectified high voltage that will be used for other parts of the amplifier.
- 3 empty positions
- 1 330K resistor
- 2 empty positions
- 1 47K resistor. The 330K and 47K resistors are used to raise the DC of the 6SH7 filament.
- 1 100R resistor. This resistor acts like a fuse; it connects between the Chassis Ground and the signal ground. Usually (!), if something catastrophic goes wrong with the amplifier this resistor will get a surge of current and blow up!, essentially cutting off the current supply and thus not allowing any critical circuitry to get damaged.

Once the resistors are physically installed, we'll make some connections on the ceramic posts and add a couple of capacitors. Use the following graphic as you follow the steps below.

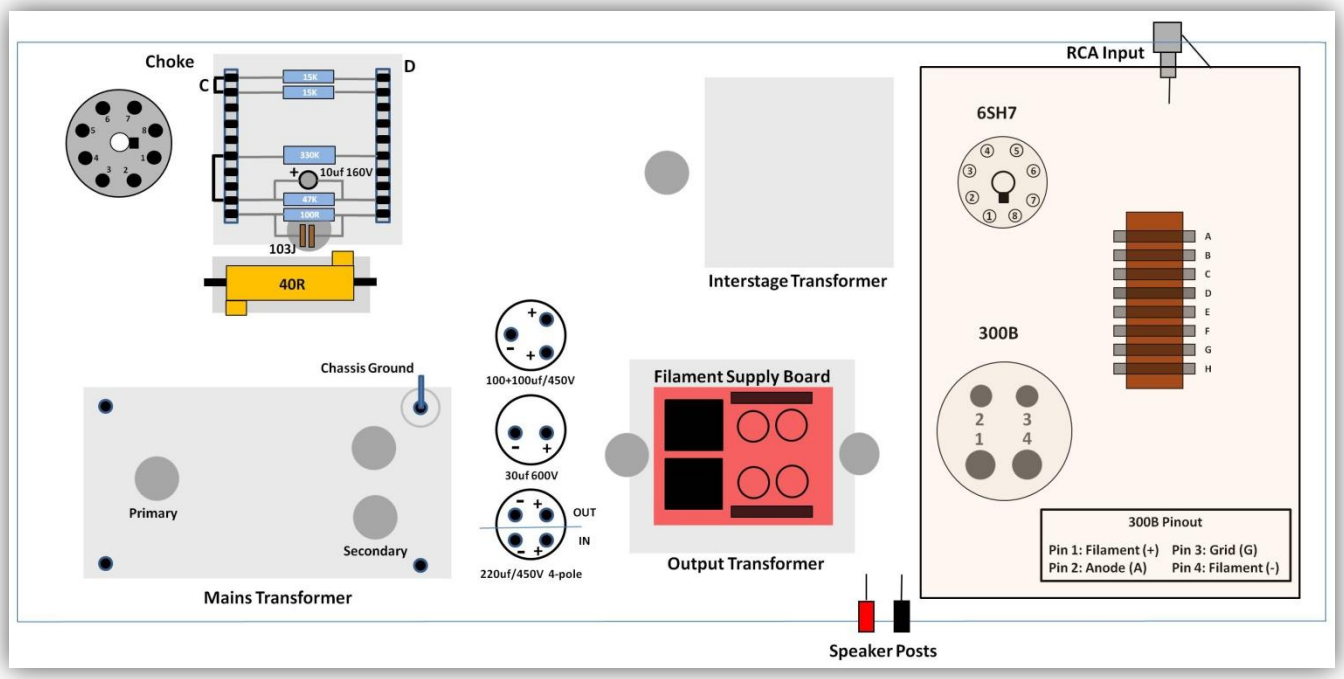

- ☐ Position the 103J (10nf) non-polarized capacitor across the 100R resistor.
- ☐ Position the 10uf 160V electrolytic capacitor across the 47K resistor, oriented as shown above.
- ☐ Connect the left ends (as shown in the graphic at 'C') of the two 15K resistors at the top and solder the top 15K post, leaving the 15K second position post unsoldered for the moment.
- ☐ Similarly, connect the left ends of the 330K and 47K resistors and solder the 330K post, leaving the 47K post unsoldered for the moment.
- ☐ Connect and solder the left end of the 100R resistor to the Chassis Ground using the Green wire that has one end attached to the Chassis Ground and one end unconnected.

www.AudioNoteKits.com
audionotekits@rogers.com

4.6 Initial Mains Secondary Wiring

Now let's install the CT wires from the Mains Secondary.

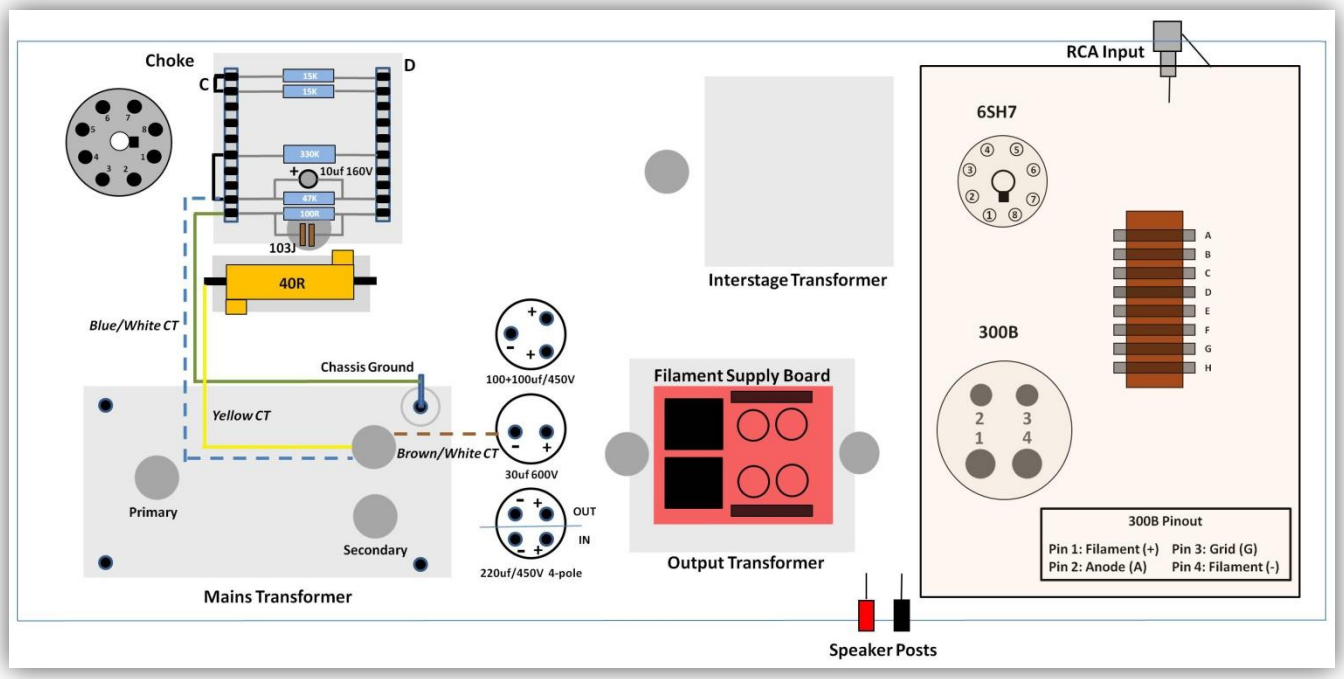

- ☐ Connect and solder the Yellow wire from the Mains Secondary to the left end of the 40R (40 ohm) Gold Mills chassis mounted resistor, as shown above.
- ☐ Position the Brown/White wire from the Mains Secondary onto the NEGATIVE terminal of the 30uf 600V chassis mounted capacitor, as shown above. Don't solder this yet.
- ☐ Connect the Blue/White wire from the Mains Secondary to the left end of the 47K resistor and solder the connections, as shown above.

www.AudioNoteKits.com
audionotekits@rogers.com

4.7 Wiring the Choke

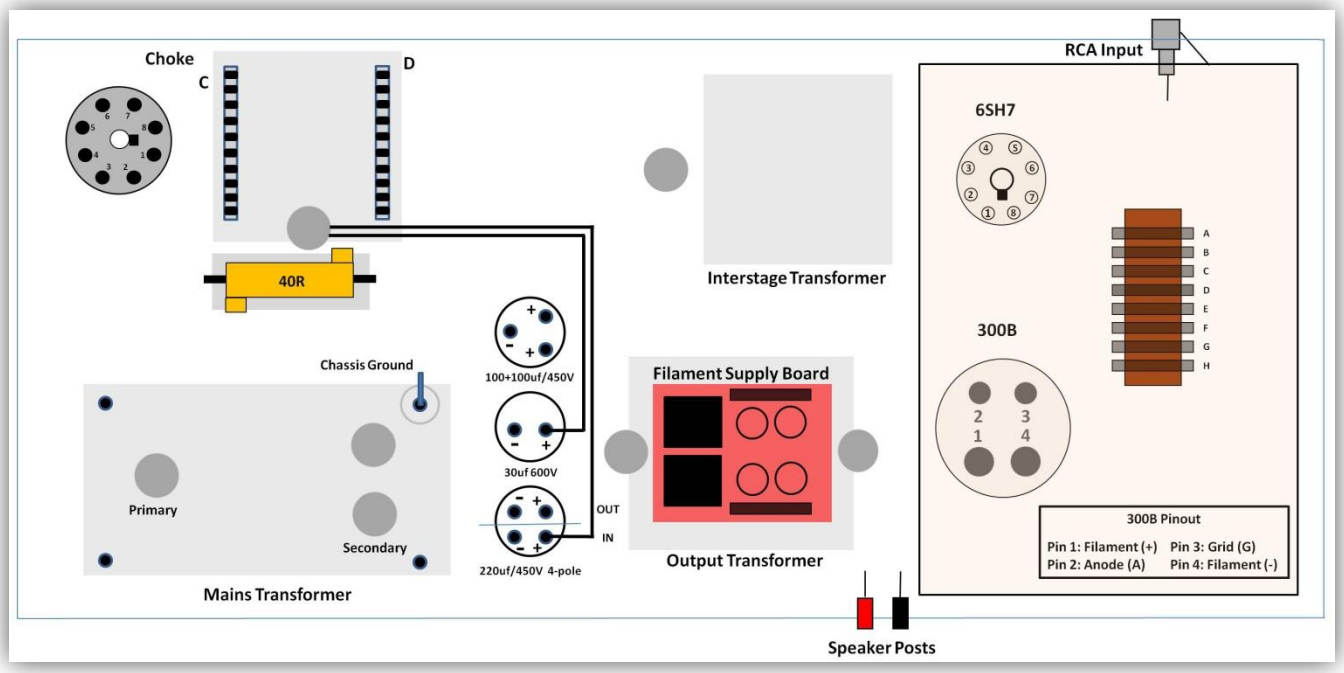

- ☐ Take the 2 Black wires coming from the Choke[6] (that is, from the grommet near the 100R resistor at the bottom of the ceramic posts) and connect one (the orientation does not matter) to the POSITIVE terminal of the 30uf 600V (don't solder this connection yet) and the other to the POSITIVE terminal of the input (IN) section of the 220uf 450V electrolytic capacitors, as shown above. Solder this connection.

Let's review what we've done so far (in addition to the Choke):

[6] A choke is basically one long piece of wire wrapped around a core in order to slow down any AC movement. They are used in power supplies to smooth out the DC that is generated by the rectifier tube.

www.AudioNoteKits.com
audionotekits@rogers.com

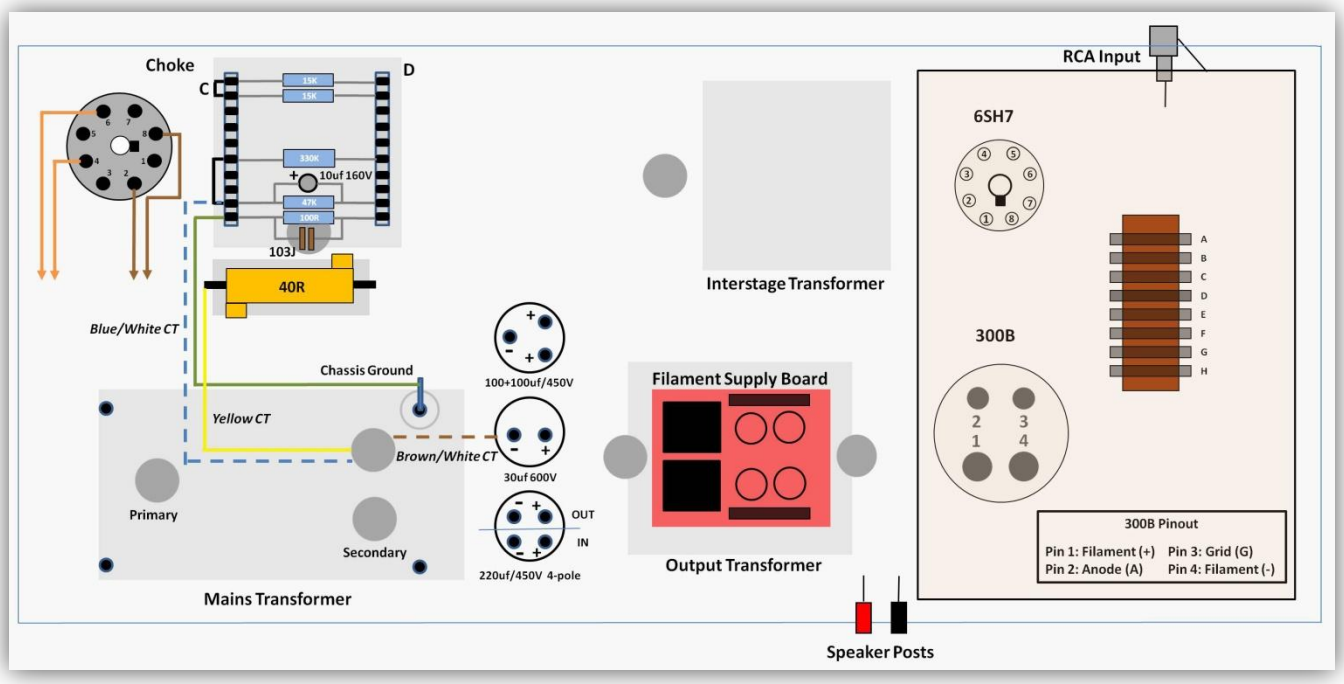

www.AudioNoteKits.com
audionotekits@rogers.com

4.8 Additional Capacitor Wiring

IT IS CRITICAL, BEFORE YOU DO THE FOLLOWING STEPS, TO MEASURE THE LENGTH OF WIRE YOU'LL NEED.

WE RECOMMEND MEASURING THE WIRE, USING SOME STRING OF THE SAME LENGTH TO "LAY IT OUT," ADJUST THE LENGTH AS NECCESARY (ALWAYS ALLOW SOME EXTRA), THEN CUT TO LENGTH. OR DON'T CUT IT UNTIL YOU'VE SOLDERED ONE END AND ARE READY TO SOLDER THE OTHER END — THEN CUT IT TO LENGTH.

It can be a challenge to do this complex wiring neatly, but here's a picture of how it can look if you spend the time and show the patience necessary to achieve a really nice result:

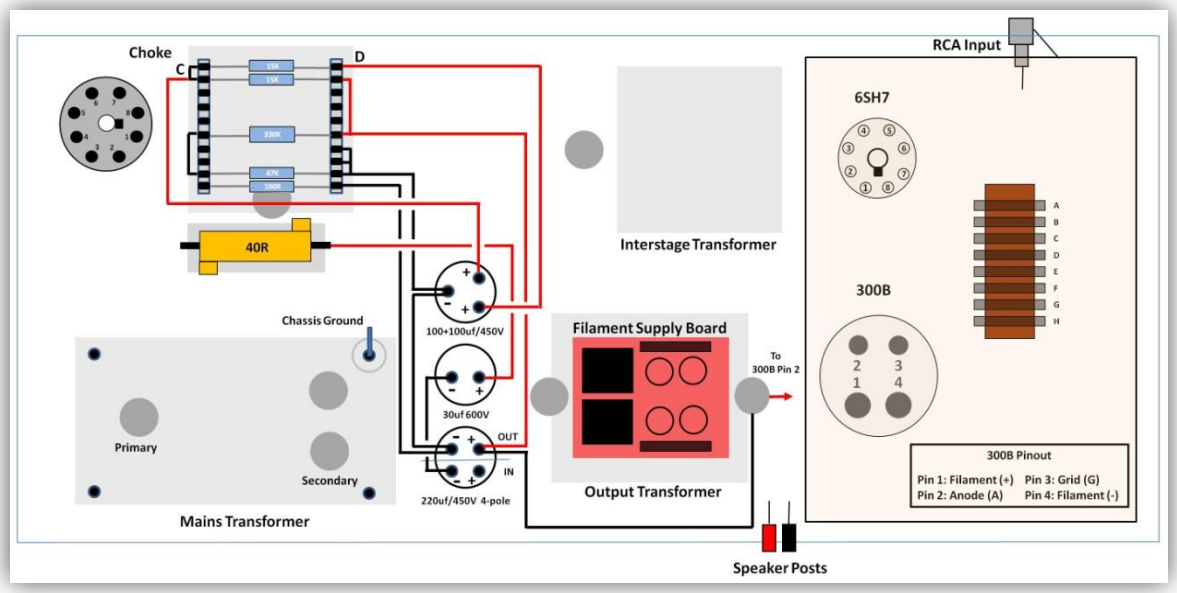

www.AudioNoteKits.com
audionotekits@rogers.com

Referencing the graphic on the previous page:

- ☐ Connect a Black wire from the NEGATIVE terminal of the 30uf 600V capacitor (with the Brown/White wire already positioned there) to the NEGATIVE terminal of the input (IN) section of the 220uf 450V capacitor (that you already connected a Choke wire to the POSITIVE terminal of). Solder both connections.
- ☐ Connect and solder a Red wire from the POSITIVE terminal of the 30uf 600V capacitor (with one of the Choke wires already positioned there) to the right end of the 40R (40 ohm) Gold Mills chassis mounted resistor.
- ☐ Connect and solder 2 Black wires to the NEGATIVE terminal of the 100uf + 100uf capacitors, as shown above.
- ☐ Connect and solder the other end of one of these Black wires on the unused right side of the 47K resistor in the ceramic posts. Add and solder 2 short jumpers as shown above, connecting that post to the 2 posts above it.
- ☐ Position the other end of the other Black wire onto the NEGATIVE terminal of the output (OUT) section of the 220uf 450V capacitor with one end of another Black wire, and solder the two of them together to the capacitor, as shown above.
- ☐ Connect and solder the other end of the Black wire added in the previous step to unused right side of the 100R in the ceramic posts.
- ☐ Connect and solder one end of a Red wire from the upper POSITIVE terminal of the 100uf + 100uf capacitors to the left end of the 15K resistor in the second position of the ceramic posts. Solder the connection.
- ☐ Connect and solder one end of a Red wire from the lower POSITIVE terminal of the 100uf + 100uf capacitors to the right end of the top 15K resistor. Solder the connection.
- ☐ Connect and solder a Red wire to the right end of the 15K resistor in the second position in the ceramic posts.
- ☐ Connect and solder the other end of the Red wire in the previous step and one end of another Red wire to the right end of the 330K resistor in the ceramic posts.
- ☐ Take the Black wire coming from the Output transformer grommet and connect it with the other end of the Red wire added in the previous step to the POSITIVE terminal of the output (OUT) section of the 220uf 450V capacitor. Solder the connections. (The Red wire coming from the Output transformer grommet will be connected later.)

Before you go any farther, we strongly recommend that you go back to the beginning of the Power Supply section, and check every connection carefully!

www.AudioNoteKits.com
audionotekits@rogers.com

Section 5

Filament Supply Board Installation

5.1 Overview

In this section we will be populating the Filament Supply PCB. This board will take the 7V AC voltage from the Mains Secondary and DC regulate it down to 5V which will be used to supply the 300B filaments.

Filament Supply board[7]

[7] The board shown in for the parallel variant. We will populate only half of it.

www.AudioNoteKits.com
audionotekits@rogers.com

5.2 Parts List

Quantity	Type	Designator
1	Filament Supply Board	
1	Black Heatsink	
2	4700uf 16V Electrolytic Capacitors	C1, C2
1	10uf 16V Electrolytic Capacitor	C5
1	KBU6J Bridge Rectifier	B1
1	LM1084 ADJ 5V Regulator	IC1
1	300R Resistor	R1
1	100R Resistor	R2

5.3 Installing the Resistors

A quick lesson about resistors:

- A resistor that reads 100R means that it is 100 ohms; the 'R' stands for resistance
- A resistor that reads 2K7 means it is 2700 ohms ; the 'R' is assumed and the K (which stands for Kilo or 1000) is positioned like the decimal place, so it's like reading 2.7K ohms (K = multiplied by 1000) — but it's shortened to 2K7
- Another example like this is the 1M resistor, which is 1 Mega ohms

Use an ohmmeter to measure each resistor to verify its correct value. There's a resistor calculator chart on the audionotekits.com website and we've included a chart in Appendix A.1.

It's a good idea to orient your resistors so that the color codes can be read from left to right; it makes it easier to spot any issues.

It's also a good idea to not have the resistors installed right against the board, for a couple of reasons: 1) it's better for heat disposition, and 2) in some cases there are circuit traces running under the resistors and we really don't want resistors touching them. So, as shown below (on a board from a different kit), we use a narrow piece of cardboard cut to size as a 2–3 mm spacer: this will still let you solder while ensuring that the resistor is not pressing against the board.

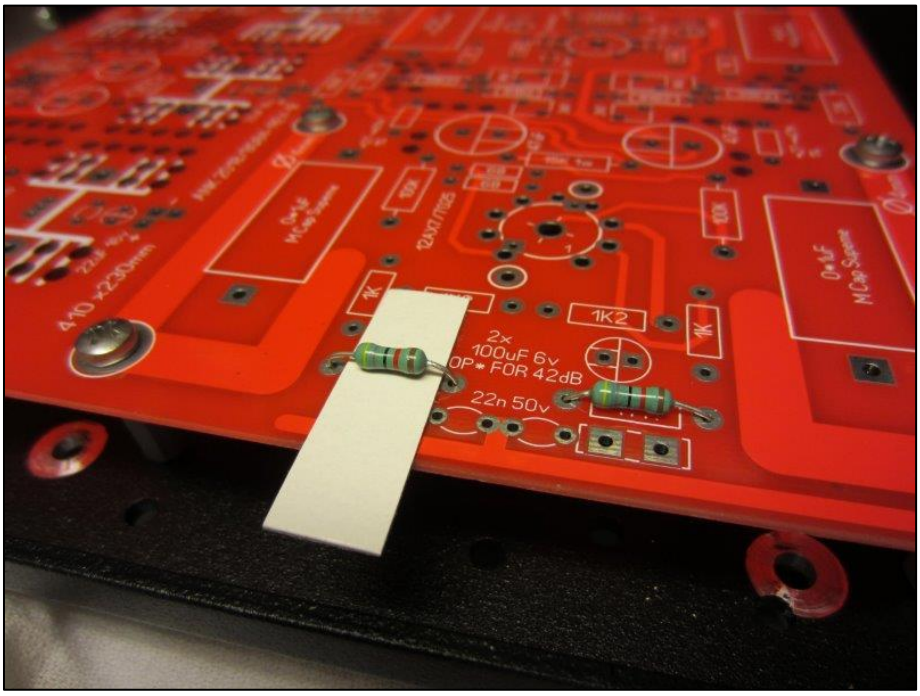

Also, be sure to solder on the underside of the board and check that you have nice little "volcanoes" on each solder joint. And, when you go to clip a lead be sure to clip above the volcano so that you don't slice off this nice joint.

- ☐ Install the 300R Resistor at R1.
- ☐ Install the 100R Resistor at R2.

5.4 Installing the Capacitors

We'll start with the electrolytic capacitors. These are the type of capacitors like, for example, the **4700uf 16V** capacitor at C1, which has a stripe down one side. You'll remember from the Introduction to the manual that the stripe denotes the NEGATIVE side. On the board you'll see a + sign which denotes the POSITIVE side. Be sure to align the capacitors correctly into position.

- ☐ Install the 2 4700uf 16V Electrolytic Capacitors at C1 and C2.
- ☐ Install the 10uf 16V Electrolytic Capacitor at C5.

www.AudioNoteKits.com
audionotekits@rogers.com

5.5 Installing the Bridge Rectifier

The Bridge Rectifier accepts AC voltage and generates a DC voltage which will be used to create the DC filament voltages. You'll see a notch on the Bridge Rectifier (part number: KBU6J): match the notch with the '+' (POSITIVE) stencil on the board.

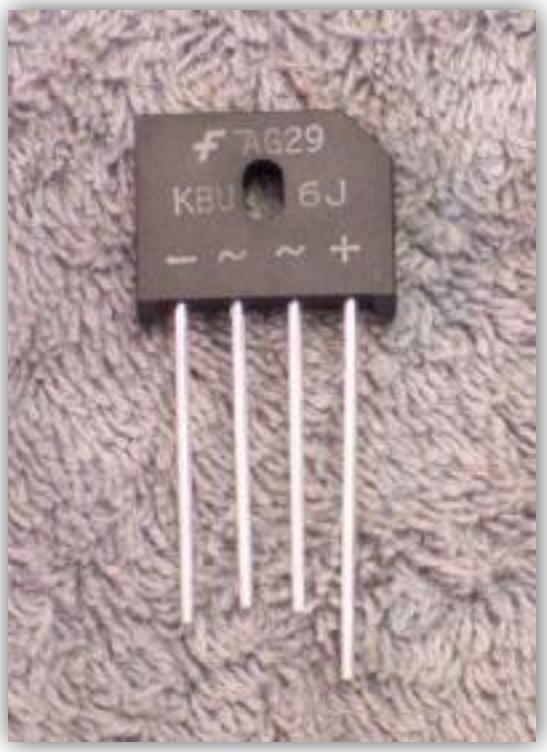

☐ Install the KBU6J Bridge Rectifier at B1.

www.AudioNoteKits.com
audionotekits@rogers.com

5.6 Installing the Regulator

First, let's have a look at how a regulator is attached to a heatsink.

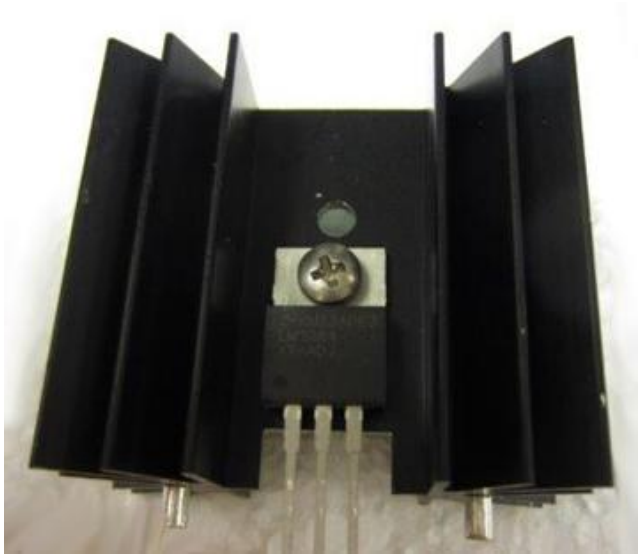

- ☐ Take an M3 PAN head screw and connect the regulator as shown in the picture. The heatsink is the same front and back but position the regulator pins and the heatsink pins in the same direction. Make sure that the regulator is straight — by doing the final tightening of the screw while holding the regular and heatsink in position on the board where it will go.
- ☐ Insert the regulator and heatsink into the board at IC1 as shown in the picture below and on the next page. Solder the 3-pin regulator and the heatsink from underneath the board.

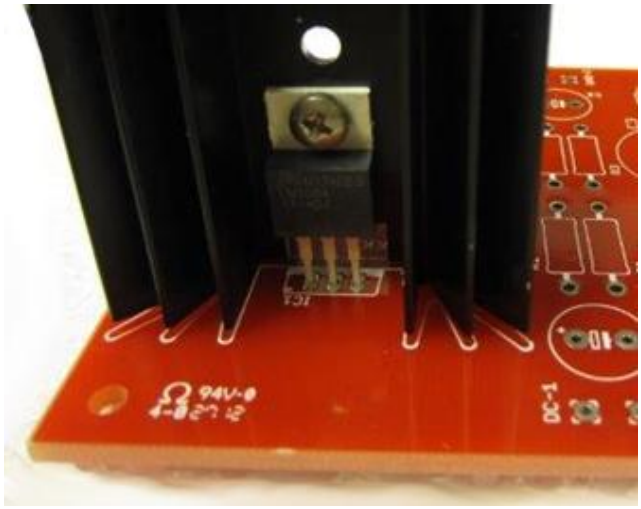

Once the Filament Supply board is ready you can position in the chassis. Don't attach it yet as we will be wiring to the board soon!

www.AudioNoteKits.com
audionotekits@rogers.com

Section 6

Filament Supply Board Interwiring

6.1 Overview

In this section we'll connect two wires from the Mains Secondary to the AC inputs on the Filament Supply board. These supply the 7V needed by the 300B tube. We recommend inserting the wires from underneath the board, soldering on the underside and the top, then cutting off the excess wire.

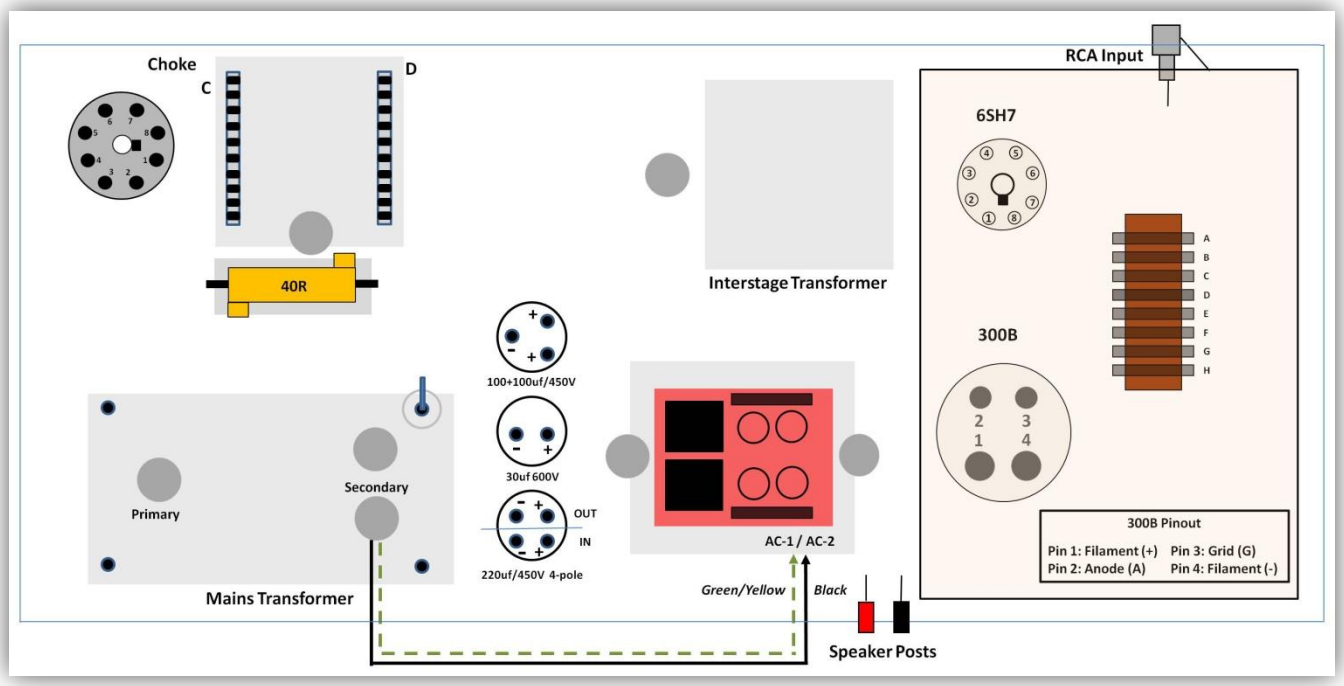

Referencing the graphic above and on the next page:

- ☐ Tie off the Black/Green and Purple wires. We won't be using them; they're used for the parallel 300B build.
- ☐ Connect the Green/Yellow and Black wires from the Mains Secondary to AC–1 and AC–2.

www.AudioNoteKits.com
audionotekits@rogers.com

Here's a close-up of the Filament Supply board:

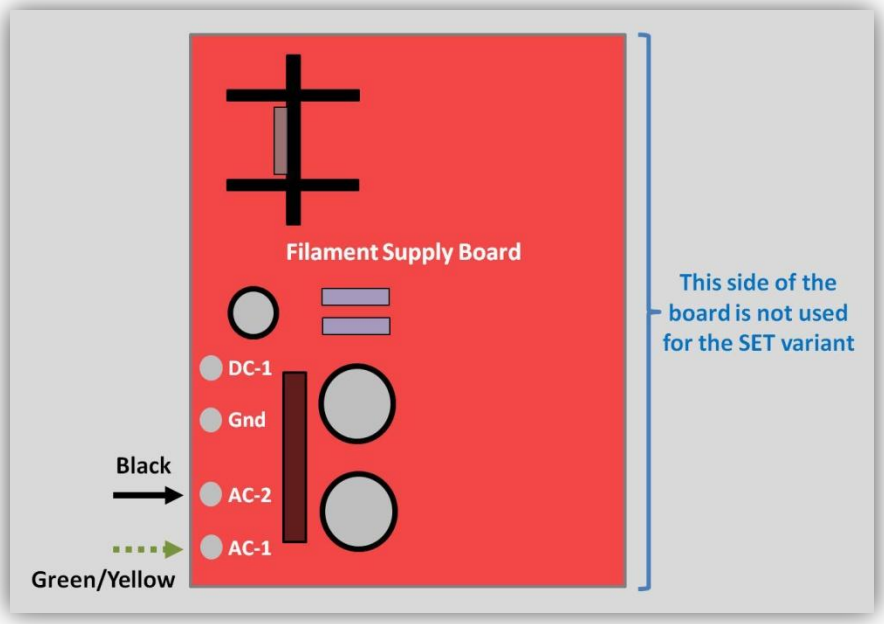

Next we'll connect one end of each of 2 wires that will supply 5V DC to the Front Insert Plate.

- ☐ Connect one end of a Red wire to the DC–1 tab, as shown below.
- ☐ Connect one end of a Black wire to the Gnd tab, as shown below.

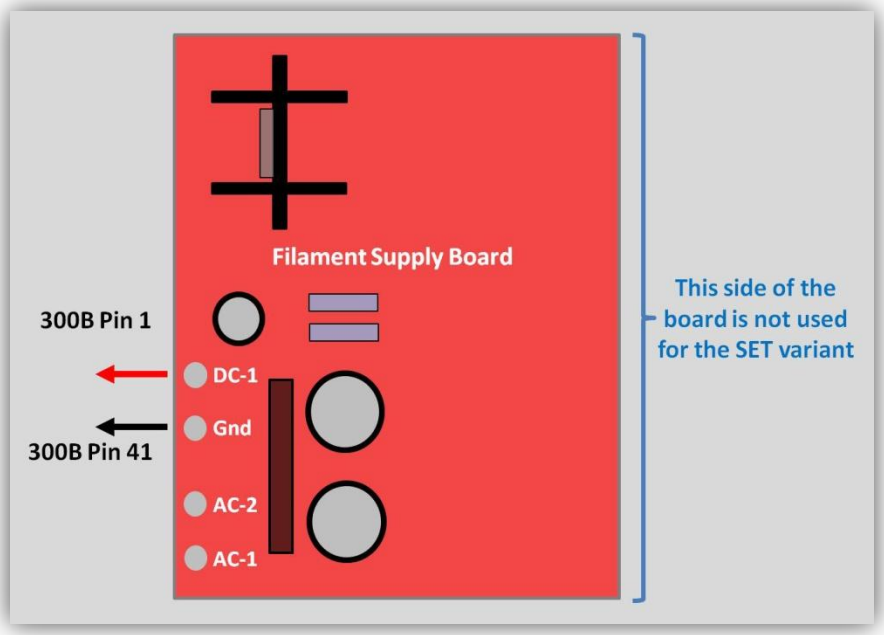

This completes the Filament Supply Board Interwiring section!

www.AudioNoteKits.com
audionotekits@rogers.com

Section 7

Front Insert Plate Wiring

7.1 Overview

In this section we will be working on the Front Insert Plate wiring.

➡ *The top of the copper plate is shiny and "good." We recommend leaving the protective coating on the copper shield while you are working with it and prior to installing in the chassis. We also recommend that you buy a spray-on copper protector to seal the copper plate; otherwise it will slowly tarnish over a couple of years. Spraying the copper plate will help it retain its shine!*

7.2 Installing the Valve Bases and the Tag Strip

Quantity	Description
1	6SH7 tube
1	300B tube
1	CMC Black Teflon 8-pin Valve Base
1	CMC Black Teflon 4-pin Valve Base
1	8-position Tag Strip

Let's begin by installing the valve bases (the 6SH7 and 300B positioning is up to you). You can work on the insert plate outside of the Monoblocks and then when we get to a certain point we will install into the chassis. The valve base rings will support the base from under the insert plate.

- ☐ Using the designated hardware, install the 2 valve bases in their correct positions.
- ☐ Install the tag strip with countersunk 6mm M3 screws from the top, then use a 10mm hex standoff is used and M3 6mm pan screws from the underside.

www.AudioNoteKits.com
audionotekits@rogers.com

7.3 Installing the Resistors

Quantity	Description
2	1K5 9W Ohmite Resistors
1	1K0 1/2W AN Tantalum Resistors

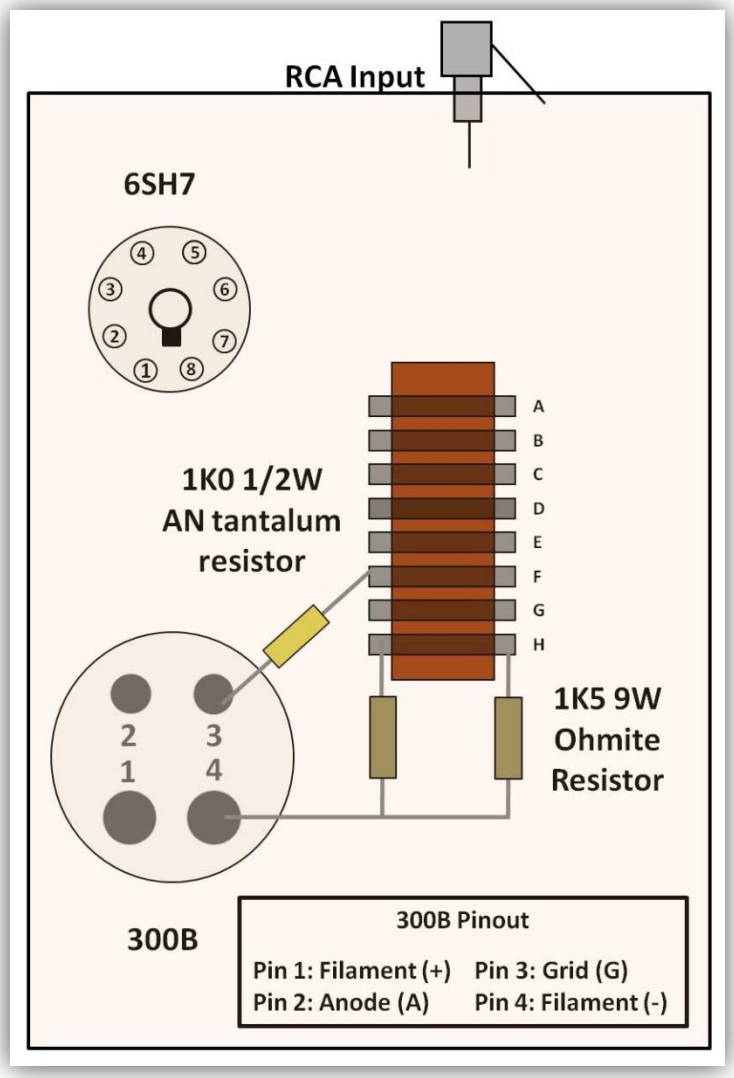

- ☐ Referencing the graphic above, install the 9W Ohmite 1K5 Cathode[8] power resistors. Take your time and carefully wrap the leads as shown. Don't cut the lead you want to wrap too short!
- ☐ Similarly, install the 1K0 1/2W AN tantalum resistor. Again, take your time and do a neat job.

[8] We're going to label the pin that is directly connect to the power resistors as the Cathode. That will mean that the Cathode is Pin 4. It's unusual and has to do with the circuit design.

www.AudioNoteKits.com
audionotekits@rogers.com

7.4 Installing the Capacitors

Quantity	Description
1	470uf 16V Elna Cerafine Electrolytic Capacitor
1	220uf 100V Elna Cerafine Electrolytic Capacitors

Referencing the graphic below, note that each tag of the tag strip is lettered and that the NEGATIVE lead of each capacitor is indicated by the stripe.

- ☐ Connect the NEGATIVE lead of the 470uf 16V Elna Cerafine Electrolytic capacitor to Tag D. Connect the other (POSITIVE) lead to Tag E.
- ☐ Connect the POSITIVE lead of the 220uf 100V Elna Cerafine Electrolytic capacitor to Tag G. Connect the other (NEGATIVE) lead to Tag H.

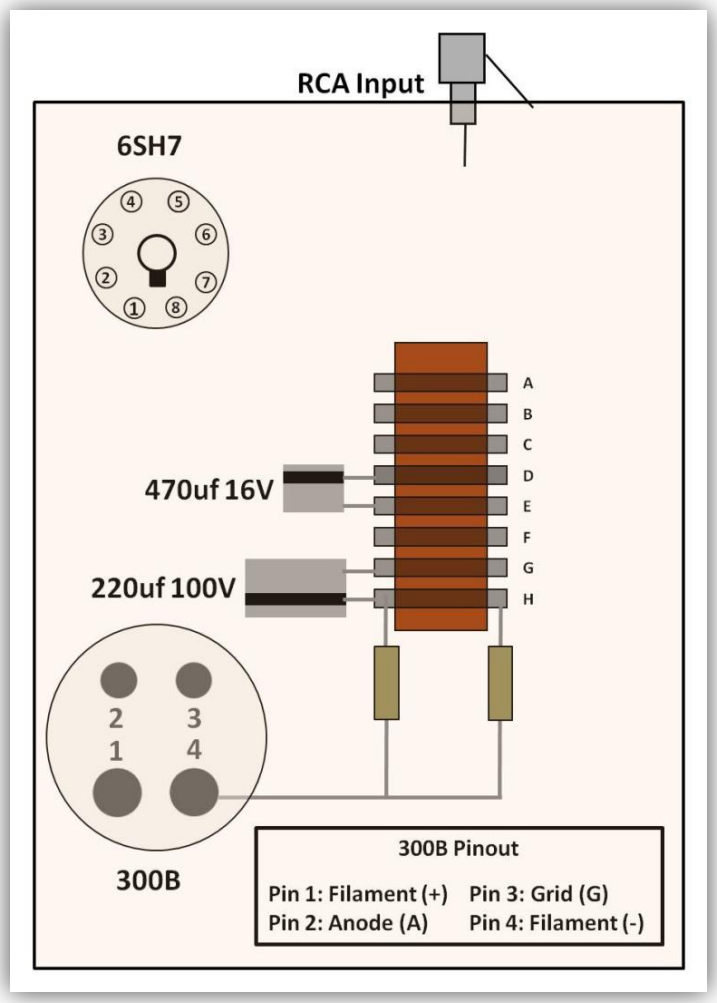

www.AudioNoteKits.com
audionotekits@rogers.com

7.5 Additional Wiring

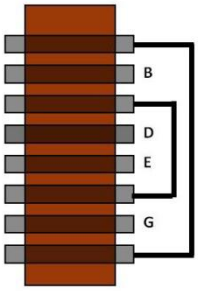

- ☐ Connect a jumper between Tag A and Tag H.
- ☐ Connect a jumper between Tag C and Tag F.

7.6 Mounting the Front Insert Plate and Further Wiring

At this point we'll want to mount the Front Insert Plate to the chassis to make the connections to the front input RCA jack and the remaining interstage components. And we'll complete some additional the Front Insert Panel interstage wiring by adding several Ground and filament wires, and another connection to the 6SH7.

Referencing the graphic below,

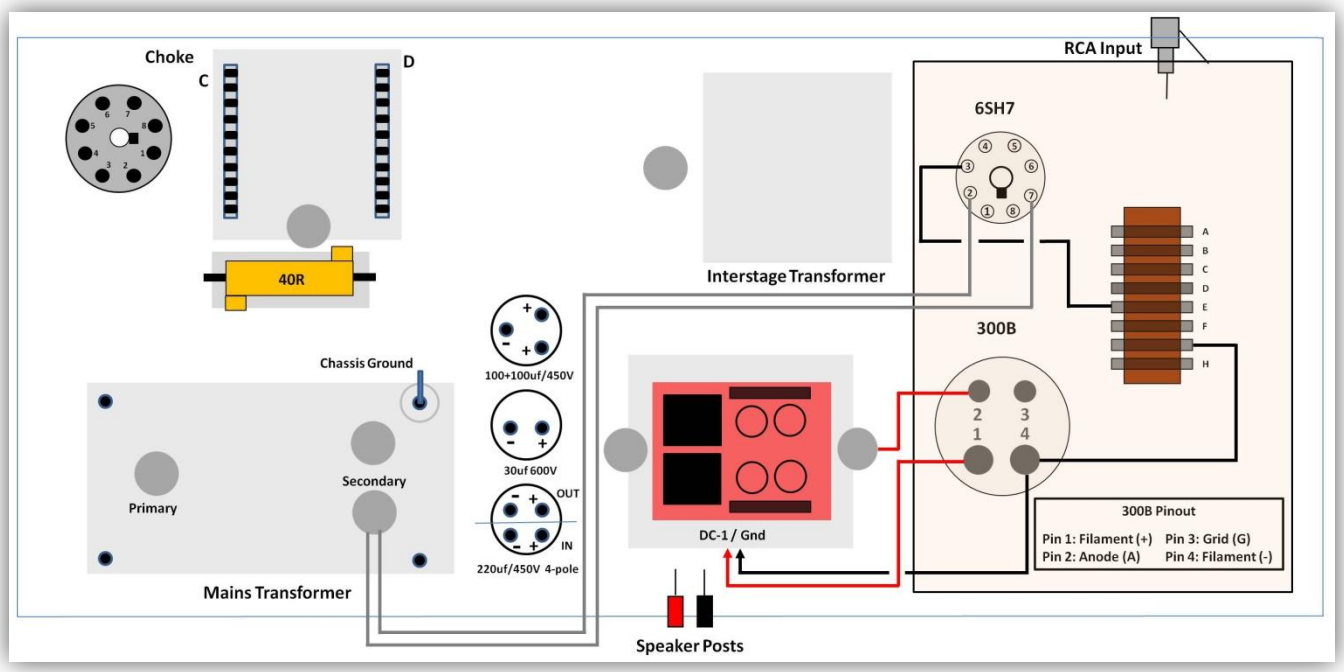

www.AudioNoteKits.com
audionotekits@rogers.com

- ☐ Connect the Red wire from the Output transformer grommet to Pin 2 on the 300B.
- ☐ Connect the Red and Black filament wires coming from the DC-1 and Gnd tabs on the Filament Supply Board to Pins 1 and 4 respectively of the 300B base.
- ☐ Connect an 18g Black wire between Pin 4 on the 300B and Tag G.
- ☐ Connect the 2 Grey wires coming from the Mains Secondary to Pins 2 and 7 of the 6SH7 base.
- ☐ Connect a Black wire from Pin 3 on the 6SH7 to Tag E.

And, finally, referencing the graphic below,

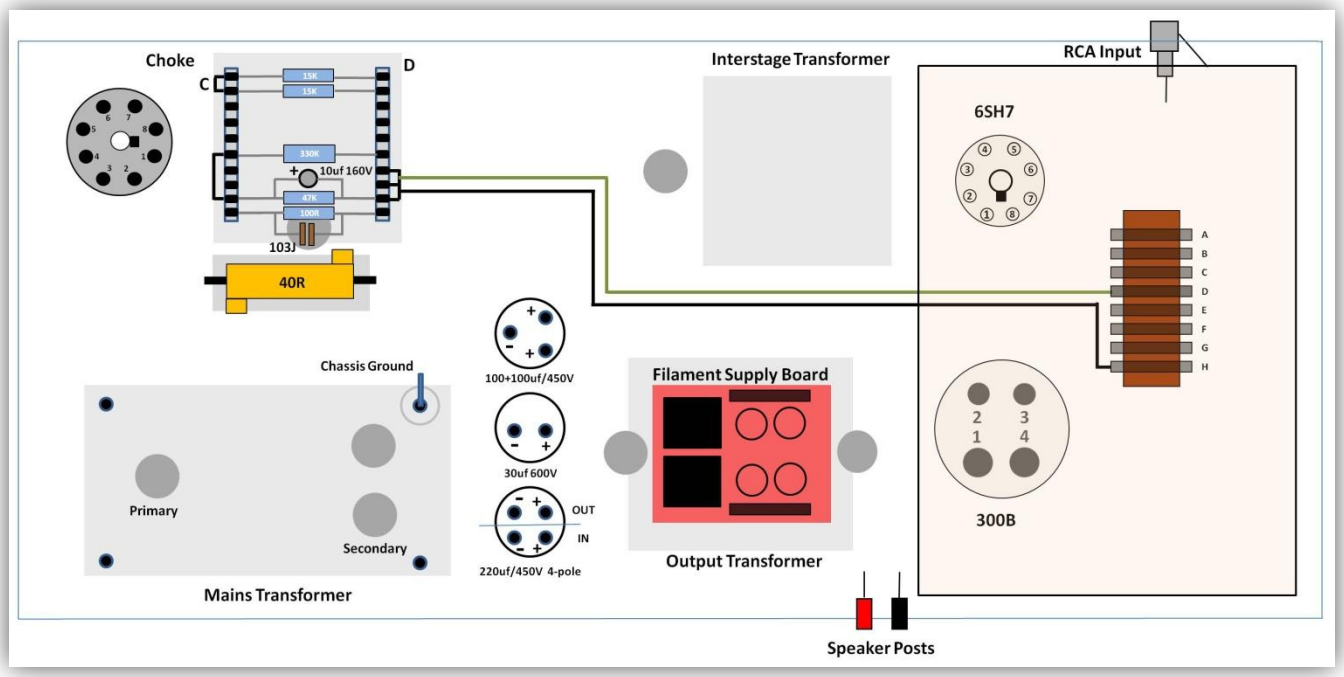

- ☐ Connect a Black 300B Ground wire coming from position 7/8/9 of the ceramic posts to Tag H.
- ☐ Connect the Green (or Black) 6SH7 Ground wire coming from position 7/8/9 of the ceramic posts to Tag D.

This completes the Front Insert Panel wiring and we'll go back to the full amplifier view for the rest of the interwiring.

www.AudioNoteKits.com
audionotekits@rogers.com

Section 8

Interstage Transformer Wiring

8.1 Overview

At this point — with the Front Insert Plate installed in the chassis — we'll make the few remaining connections from the Interstage transformer to the Front Insert Plate. There are 4 wires (Black, Red, White, and Blue) coming from the Interstage transformer grommet.

Referencing the graphic below,

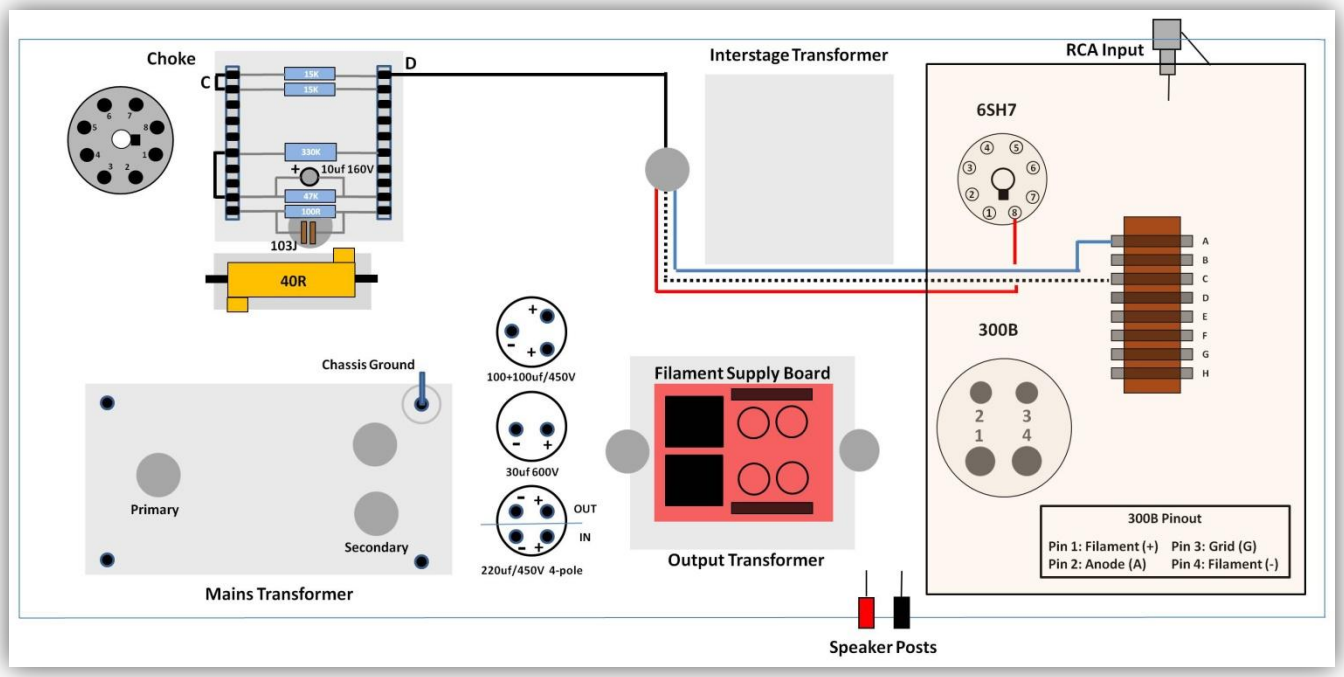

- ☐ Connect the Black wire coming from the Interstage transformer grommet to position 1 ('D') on the ceramic post.
- ☐ Connect the Red wire coming from the Interstage transformer grommet to pin 8 of the 6SH7 valve base.
- ☐ Connect the White wire coming from the Interstage transformer grommet to Tag C on the tag strip.
- ☐ Connect the Blue wire coming from the Interstage transformer grommet to Tag A on the tag strip.

www.AudioNoteKits.com
audionotekits@rogers.com

Section 9

Installing and Wiring the Rear Connectors

9.1 Overview

In this section we'll install the input RCA jack and the Speaker Posts on the rear of the Chassis.

9.2 Installing the RCA Input Jack

☐ Next, we'll install the input RCA jack, using the following steps:

Insert into the chassis from the outside:

- The white insulating washer with the raised ring facing inwards into the hole
- The RCA jack

Attach, from the inside of the chassis, onto the protruding jack:

- The other white insulating washer
- The ground lug
- The nut (don't immediately tighten this more than one or two turns

☐ Bend the ground lug up about 30 degrees and position at about 2 o'clock. *Make sure it is away from the chassis.*

☐ Tighten the jack *such that the inner lug is facing up/open*; it'll make soldering much easier in that position.

Make sure everything is snug and well tightened.

www.AudioNoteKits.com
audionotekits@rogers.com

9.3 Wiring the RCA Input Jack

Quantity	Description
1	100K 2W AN Tantalum Resistor
1	1K 2W AN Tantalum Resistor
1	330R 1/2W AN Tantalum Resistor
1	100R 2W AN Tantalum Resistor

Now we'll add the input resistors, as shown in the following graphic:

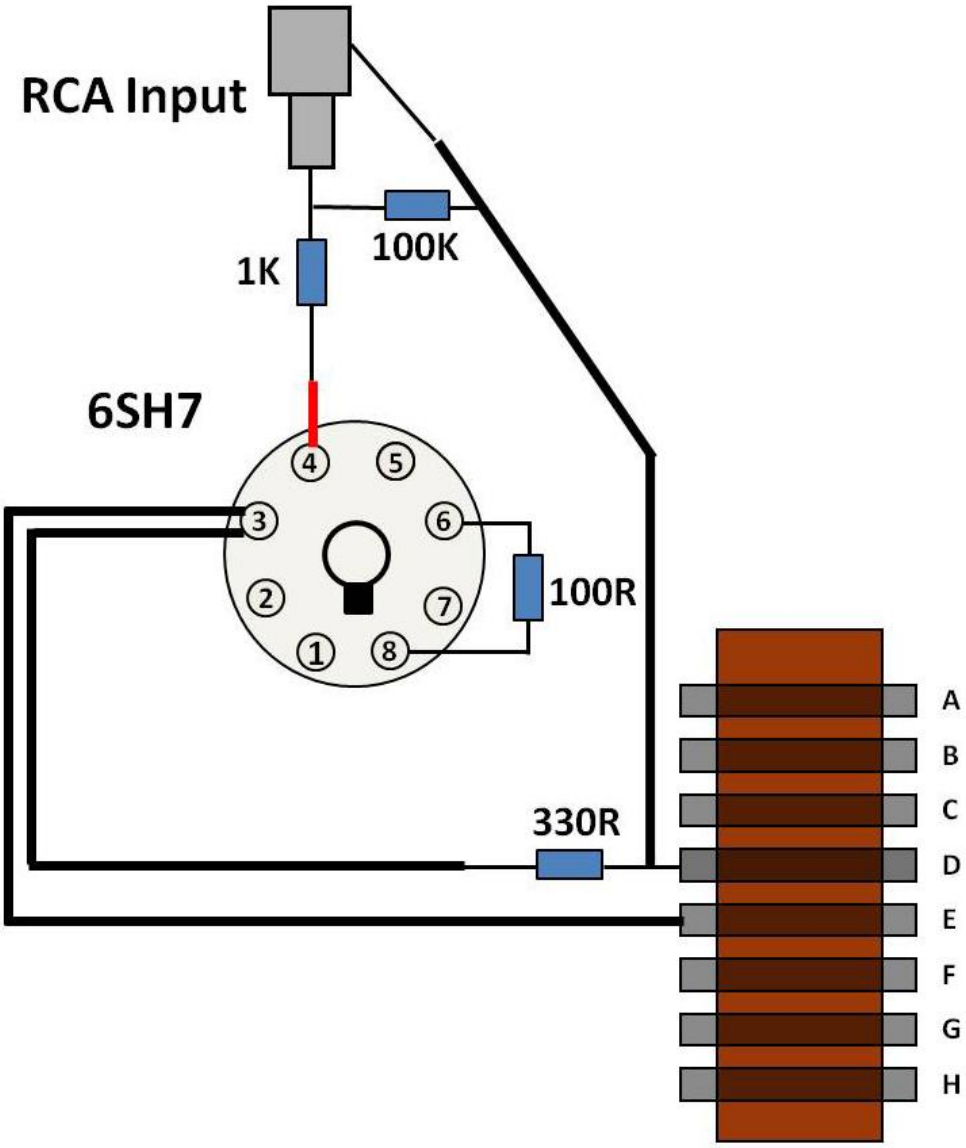

www.AudioNoteKits.com
audionotekits@rogers.com

This wiring is a bit tricky. Let's do it step by step:

- ☐ Tin one end of each of the 1K and 100K 2W resistors.
- ☐ Put a puddle of solder in the center of the RCA jack.
- ☐ Heat the solder puddle and slide the ends of the 1K and 100K resistors into the center of it. They should adhere easily.

- ☐ Measure the lengths of the Red and Black wires that you'll need to make the connections. Allow a little extra.
- ☐ Tin the ends of the Red and Black wires.

- ☐ Connect a 100R 2W resistor on the 6SH7 valve base between pins 6 and 8. Wrap the ends of the resistor around the pins to secure it.
- ☐ Connect the other end of the 1K resistor to pin 4 of the 6SH7 valve base.
- ☐ Connect the other end of the 100K resistor to the Ground of the RCA jack and to Tag D.
- ☐ Connect a 330R 1/2W resistor from pin 3 (where the Black wire to Tag E is already connected) of the 6SH7 to Tag D.

www.AudioNoteKits.com
audionotekits@rogers.com

9.4 Installing the Speaker Posts

- ☐ Install the Red and Black speaker posts on the side of the chassis.
- ☐ Put a puddle of solder in the center of each speaker post.

The IE core output transformer has three colored wires on the Secondary:

- ❖ Green is Ground
- ❖ Blue is the 4 ohm tap
- ❖ Purple is the 8 ohm tap

8 ohm Speaker Wiring

- ☐ Connect the Purple wire to the Red speaker post.
- ☐ Connect the Green wire to the Black speaker post.
- ☐ Cut the end of the Blue wire cleanly and cover it with a small plastic wire connector.

4 ohm Speaker Wiring (not shown)

- ☐ Connect the Blue wire to the Red speaker post.
- ☐ Connect the Green wire to the Black speaker post.
- ☐ Cut the end of the Purple wire cleanly and cover it with a small plastic wire connector.

www.AudioNoteKits.com
audionotekits@rogers.com

Section 10

Wiring Check Lists

Print out and use these lists to check your work:

6SH7 Tube			
☐	Pin 1	Not connected	
☐	Pin 2	AC Grey Filament from Mains Secondary	
☐	Pin 3	330R to Tag D	Black Wire to Tag E
☐	Pin 4	1K resistor from RCA Signal	
☐	Pin 5	Not connected	
☐	Pin 6	100R resistor to Pin 8	
☐	Pin 7	AC Grey Filament from Mains Secondary	
☐	Pin 8	100R resistor to Pin 6	Red Wire from Interstage Secondary

300B				
☐	Pin 1	Red filament wire from Filament Supply board		
☐	Pin 2	Red wire from O/P transformer Primary		
☐	Pin 3	1K0 resistor to Tag F		
☐	Pin 4	Black filament wire from Filament Supply board	Black wire to Tag G	2 x 1K5 resistors from Tag H

5U4G		
☐	Pin 1	Not connected
☐	Pin 2	Brown filament wire from Mains Secondary
☐	Pin 3	Not connected
☐	Pin 4	Orange filament wire from Mains Secondary
☐	Pin 5	Not connected
☐	Pin 6	Orange filament wire from Mains Secondary
☐	Pin 7	Not connected
☐	Pin 8	Brown filament wire from Mains Secondary

www.AudioNoteKits.com
audionotekits@rogers.com

Tag Strip					
☐	Tag A	Wire to Tag H		Blue wire from Interstage Secondary	
☐	Tag B	Not connected			
☐	Tag C	Wire to Tag F		White wire from Interstage Secondary	
☐	Tag D	470uf 16V NEGATIVE	330R resistor to 6SH7 Pin 3	Green wire to Power Supply posts, right side near bottom	100K resistor from RCA Ground
☐	Tag E	470uf 16V POSITIVE		Black Wire to 6SH7 Pin 3	
☐	Tag F	1K0 resistor to 300B Pin 3		Wire to Tag C	
☐	Tag G	220uf 100V POSITIVE		Black wire to 300B Pin 4	
☐	Tag H	2 x 1K5 resistors to 300B Pin 4	220uf 100V NEGATIVE	Wire to Tag A	Black wire to Power Supply posts, right side near bottom

Ceramic Posts (Left Side)					
☐	Position 1	Wire to Left Side Position 2	15K resistor		
☐	Position 2	Wire to Left Side Position 1	15K resistor	Red wire to POSITIVE of top 100+100uf capacitor	
☐	Position 3	Not connected			
☐	Position 4	Not connected			
☐	Position 5	Not connected			
☐	Position 6	Wire to Left Side Position 9	330K resistor		
☐	Position 7	Not connected			
☐	Position 8	Not connected			
☐	Position 9	Wire to Left Side Position 6	47K resistor	Mains Secondary Blue/White CT	POSITIVE of 10uf 160V capacitor
☐	Position 10	Green wire to Chassis Ground	100R resistor		103J capacitor

www.AudioNoteKits.com
audionotekits@rogers.com

Ceramic Posts (Right Side)				
☐	Position 1	15K resistor	Black wire from Interstage transformer	Red wire to POSITIVE of bottom 100+100uf capacitor
☐	Position 2	15K resistor	Wire to Right Side Position 6	
☐	Position 3	Not connected		
☐	Position 4	Not connected		
☐	Position 5	Not connected		
☐	Position 6	330K resistor	Wire to Right Side Position 2	Red wire to POSITIVE of the output (OUT) section of the 220uf capacitor
☐	Position 7	Wire to Right Side Position 8		
☐	Position 8	Wire to Right Side Position 9	Green wire to Tag D and Black wire to Tag H	
☐	Position 9	Wire to Right Side Position 8	Black wire to NEGATIVE of 100+100uf capacitor	NEGATIVE of 10uf 160V capacitor
☐	Position 10	100R resistor	Black wire to NEGATIVE of output (OUT) section of the 220uf capacitor	103J capacitor

www.AudioNoteKits.com
audionotekits@rogers.com

Section 11

Testing

11.1 Overview

It's time do to some testing to make sure that amplifier has been correctly wired and that things are working the way they're supposed to.

Our plan is as follows:

- With no tubes installed, power the amplifier on to verify that the fuse does not blow.
- Make some basic DC measurements: for example, checking the 5V filaments of the 300B.
- Install the 6SH7 and the 300B, then power on to make sure that the 300B glows.
- Install the 5U4G rectifier and measure a number of key AC and DC voltages.
- Test with a 'cheap' speaker for sonics and hum. If all is well, play in a proper system, enjoy!

Before testing, it's a good idea to blow some air into the unit and make sure that there are no small pieces of wire or solder floating around.

www.AudioNoteKits.com
audionotekits@rogers.com

11.2 Installing the Fuse

Tubes Installed At This Point: None

Let's start by installing a 1A Slo-Blo fuse (from the IEC bag) into position as shown below[9].

- ☐ If the fuse holder is already installed in the IEC plug, use a screwdriver, a flat edge, or your fingers to pull it out — you'll need to squeeze it to completely remove it.
- ☐ Install the fuse in the small plastic fuse holder and insert it into the IEC. (You can ignore any lettering like '240V only' — there is only one fuse holder type for all world voltages.)

- ☐ Turn the amplifier on. If the fuse does not blow, continue to the next step. If it does, jump ahead to "Debugging." Turn the amplifier off.

[9] The picture is from a different build, but it's the same procedure.

www.AudioNoteKits.com
audionotekits@rogers.com

11.3 Initial Tests

Let's begin by doing some basic tests, with the amplifier off.

A good place to start would be to measure resistance: let's do an easy one and check the resistance across the Gold Mills 40R resistor that is attached to the chassis in the Power Supply area. Put your multimeter in Ohms mode and touch a probe to each side of this resistor to check its resistance; you should see something close to 40 ohms.

Now let's have a look at the Chassis Ground, an important point in the testing process. In the picture below[10] I'm touching the Black test probe of my multimeter to the Chassis Ground, right next to the 40R resistor.

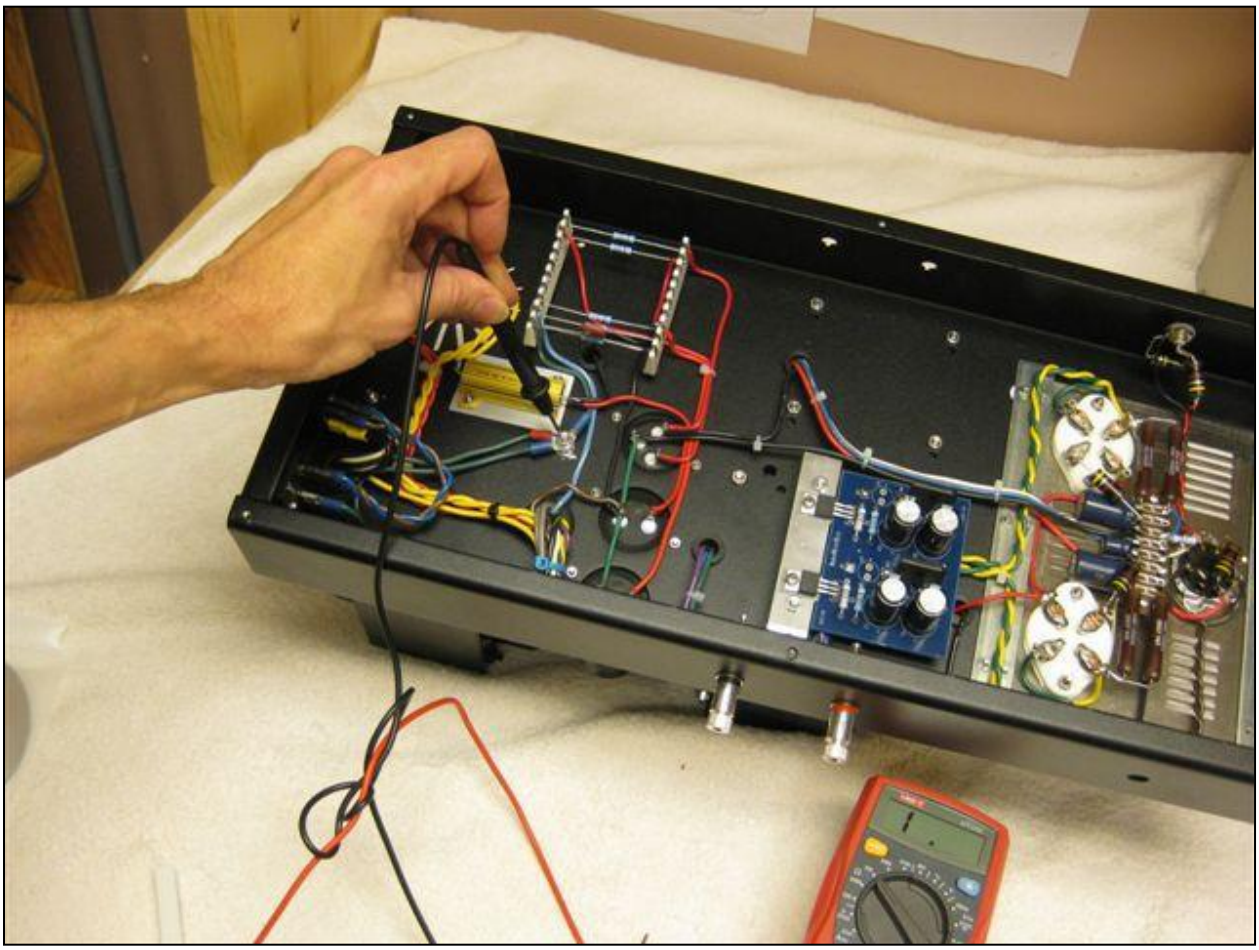

The Chassis Ground is the universal ground point in the amplifier: with the Black lead positioned there, the Red lead can be positioned somewhere else in the amplifier to get a resistance reading.

[10] The picture is from an earlier variant of the amplifier, but the Chassis Ground hasn't moved.

www.AudioNoteKits.com
audionotekits@rogers.com

Try this:

- Place your multimeter in Connectivity mode
- Put one probe on the Chassis Ground
- Check all the other grounds in the circuit to see that there is zero ohms or close (a couple of ohms is OK) between all the ground points.

Let's move on to our first power-up.

11.4 First Power-Up

IMPORTANT NOTE

Follow the turn-on procedure carefully. DO NOT AT ANY TIME ONLY INSTALL THE 5U4G TUBE WITHOUT ANY OTHER TUBES (SUCH AS THE 300B) INSTALLED. The reason for this is that the 5U4G tube is counting on having a specific load to drive. If the 5U4G is used without other tubes installed then the amplifier will 'see' significantly higher DC voltages (close to 600V!), which can overextend the Power Supply capacitors. You could possibly start hearing cracking noises and then who knows what, as they are beyond their maximum voltage ratings.

Here's a graphic to follow as we perform the Front Insert Panel voltage checks:

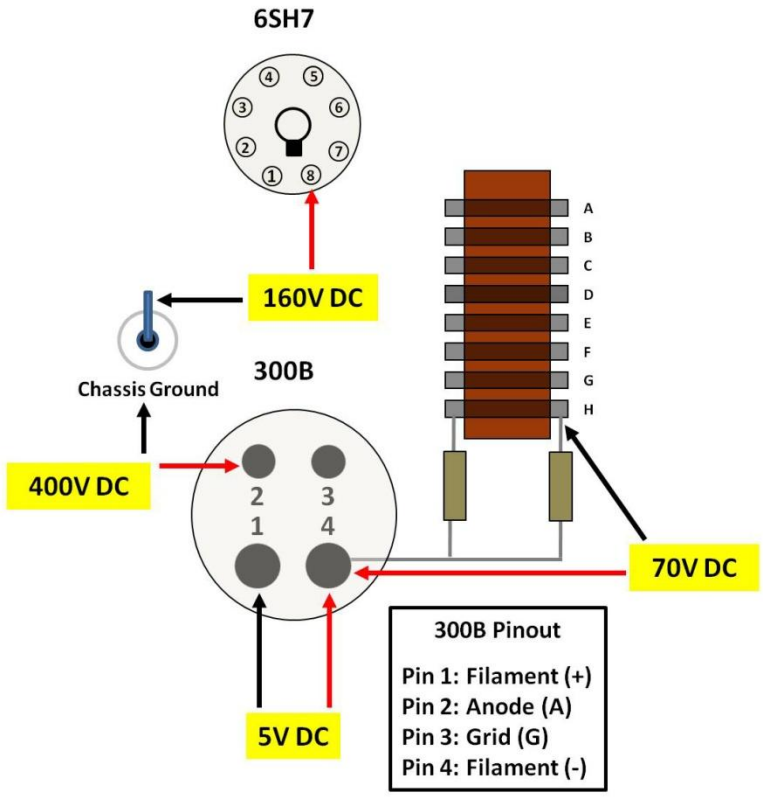

www.AudioNoteKits.com
audionotekits@rogers.com

Just a reminder to please be aware of proper electrical safety.

There are sufficient voltages in this kit to give you a very nasty and harmful shock, so be careful when powering on, debugging, and probing around.

Turn the amplifier on.

Let's check the 5V DC on the filament pins (Pins 1 and 4) of the 300B: these are the two 'fat' pins nearest the sides of the chassis.

Multimeter Setting	Black Lead	Red Lead	Approximate Reading
DC	300B Pin 1	300B Pin 4	5V DC

Turn the amplifier off. If all is well then you can install the 6SH7 and the 300B tube into position on the Front Insert Plate. The 6SH7 tube is keyed and you need to match up the notch on the 8-pin valve base with the tube base. *Make sure you don't mix it up with the 5U4G tube which is also an 8-pin valve base tube.* The 300B tube can only be installed one way in the 4-pin valve base.

Tubes Installed At This Point: 6SH7 and 300B

Turn the amplifier on. After a few seconds, the 300B should begin to glow. Turn the amplifier off. If all is well then let's move on to some more comprehensive testing.

11.5 Voltage Tests

Install the 5U4G rectifier tube.

Tubes Installed At This Point: All

Turn the amplifier on.

Now we're going to measure key DC voltages. If you're using a Variac take into consideration that the voltages you'll be measuring are going to be a percentage of the full DC voltages: for example, with the Variac at 90V AC instead of 120, you can factor in that the DC voltages will be down by 25%.

www.AudioNoteKits.com
audionotekits@rogers.com

Worst Case Scenario

Installing the 5U4G rectifier provides the amplifier with the various DC voltages (including the HT) that it needs to operate; usually, if there is a problem with the build, then it's going to be noticed here. *It's possible that, if there is a major problem, the fuse will blow — or you may get a burning resistor or even see some smoke.* If anything alerts you that there is something drastically wrong then turn off the unit ASAP, unplug it, and contact us at audionotekits@rogers.com before proceeding. We'll be happy to provide you with advanced troubleshooting advice. Note: we may ask that you send us high quality digital pictures of the internals of the amplifier.

11.5.1 HT and Other 300B Voltages

Let's begin by measuring the HT (or B+) and other high voltages around the 300B.

Multimeter Setting	Black Lead	Red Lead	Approximate Reading
DC	Chassis Ground	Anode (Pin 2) of 300B	400V ± 5%

The first measurement is the HT voltage on the Anode (Pin 2) of the 300B: the Anode of the 300B is the pin with a Red wire connected to it from the Output transformer. It's a good idea to get your schematic out and check the location that you are measuring (Pin 2). The measurement will be in the 400V DC range: it could be higher or lower if, for example, the AC voltage coming out of the wall is higher or lower than 120V. The 400V is a key voltage: it means that over half of the Power Supply is operating properly.

You may find when you go to make a reading on Pin 2 of the 300B that the multimeter reads 0; you may want to press just a little harder with the probe (sometimes probes do not make great contact with the actual surface).

Now let's check the Cathode (Pin 4) of the 300B: this is where the 1K5 resistors, connected in parallel, connect to the 300B. We should see about 70V DC, which is what the 300B is designed to run at in order to operate correctly.

Multimeter Setting	Black Lead	Red Lead	Approximate Reading
DC	Tag H	300B Cathode (Pin 4)	70V range

11.5.2 6SH7 Voltage

Now let's measure the Anode (Pin 8) of the 6SH7 tube: this point is connected to the Interstage transformer by a Red wire.

Multimeter Setting	Black Lead	Red Lead	Approximate Reading
DC	Chassis Ground	6SH7 Anode (Pin 8)	160V range

You should read about 160V DC. If the voltage is high here — say over 220V — then contact us.

11.5.3 Power Supply Voltages

Let's measure the output of the Power Supply after the last 15K resistor:

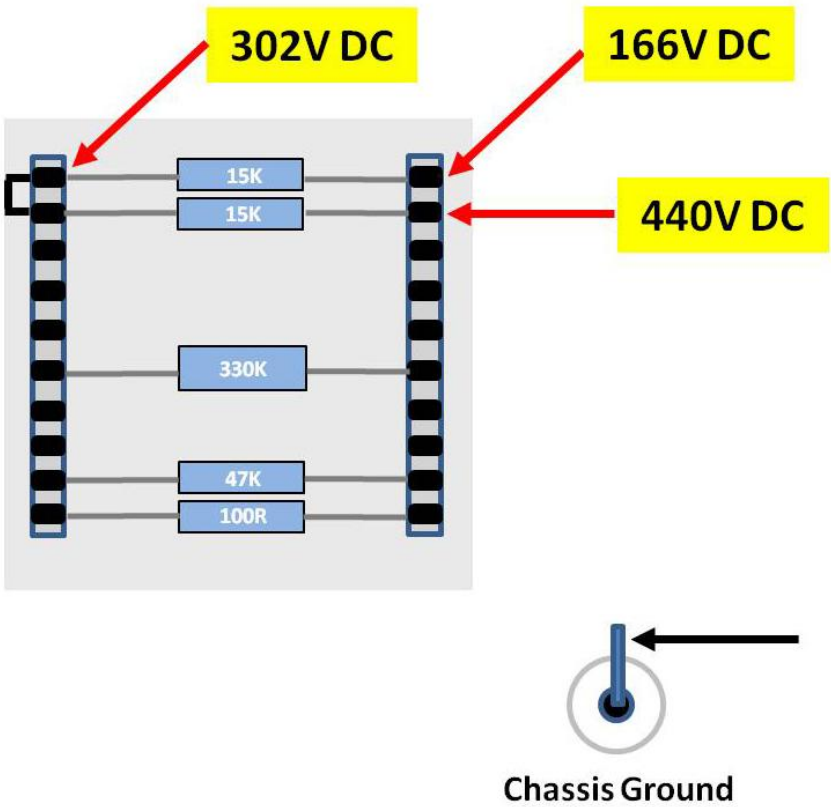

We should see about 166V DC. Then check the other side of the 15K resistor: we should see about 302V DC. Next, measure the voltage at input to the 15K resistors: we should see 440V.

Multimeter Setting	Black Lead	Red Lead	Approximate Reading
DC	Chassis Ground	Top right ceramic post	166V
DC	Chassis Ground	Top left ceramic post	302V
DC	Chassis Ground	15K resistors 'input'	440V

www.AudioNoteKits.com
audionotekits@rogers.com

Finally, let's check two key AC voltages on the rectifier (5U4G). These are the filament voltages for the 6SH7 and the 300B. Since the maximum voltage on many multimeters is 600V, we'll measure the AC voltage for each pin (4 and 6) referenced to the Chassis Ground. For the 5V measurement, you can simply position the probes as shown: one on Pin 2 and one on Pin 8 (the orientation doesn't matter).

Multimeter Setting	Black Lead	Red Lead	Approximate Reading
AC	Chassis Ground	5U4G Pin 4	345-395V AC
AC	Chassis Ground	5U4G Pin 6	345-395V AC
AC	5U4G Pin 2	5U4G Pin 8	5V AC

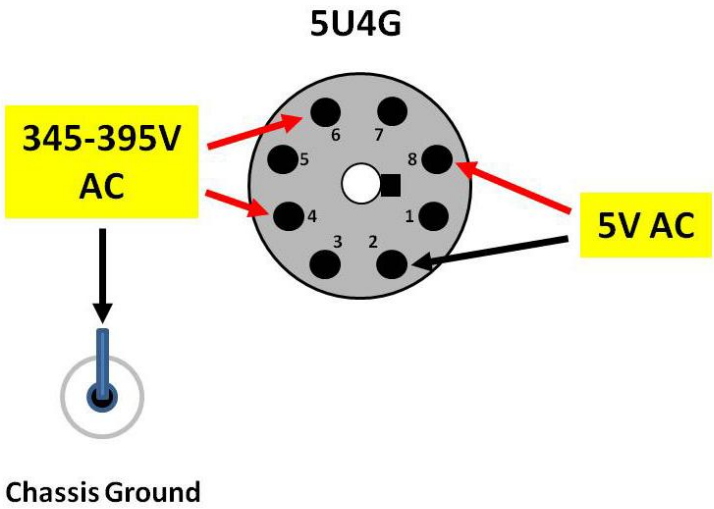

Well done if all these voltages are good! Let's move on to the sound check.

11.6 Sound Check

Now that we have an amplifier with correct DC conditions it's time to see if we can get some sound. We recommend hooking up your CD player or computer to the input — and a pair of "cheap" speakers! — and pass an audio signal through the amplifier to verify that it is working correctly.

When the monoblock turns on you will hear a hum for about 15 seconds; then it will disappear. The reason for this is the voltages are settling: it's kinda like throwing a rock in a swimming pool; it takes a bit of time before the ripples (or, in our real world case, the DC voltages) settle.

If these check out, congratulations! You should have a working Interstage Monoblock Amplifier. Feel free to contact us to share your excitement.

www.AudioNoteKits.com
audionotekits@rogers.com

11.7 Debugging

If you have no sound coming out of your amplifier then the best place to start is by doing some basic checks.

- Make sure you have a signal entering the amplifier.
- Make sure that your speakers are connected.
- Recheck the wiring in the Power Supply and Front Insert Plate.

If that doesn't fix things, contact ANK Audio Kits at audionotekits@rogers.com. We'll figure things out. Please have a few telling digital pictures ready to share with us.

Section 12

Finishing Touches

We have now verified proper AC conditions and done a sound check.

Before closing the amplifier up, it's not a bad idea to install the base plate and turn the amplifier right side up to make sure that it works properly in the standard position.

12.1 Installing the Front Faceplate

- ☐ Remove the protective films from the front and back of the front faceplate.
- ☐ Install the front faceplate using four Black M4 CSK flat head screws.

12.2 Installing the LED

- ☐ Carefully trim the LED leads so that they are not exposed.

➡ *It's a good idea to trim the NEGATIVE lead a bit shorter than the POSITIVE lead so that, if you need to remove the LED later for any reason, you'll know which is the POSITIVE lead (the longer lead) and will be able to reinsert it correctly.*

- ☐ Glue or attach (with some Blu Tack) the LED holder to the front panel so that the LED protrudes through the designated hole, as shown below:

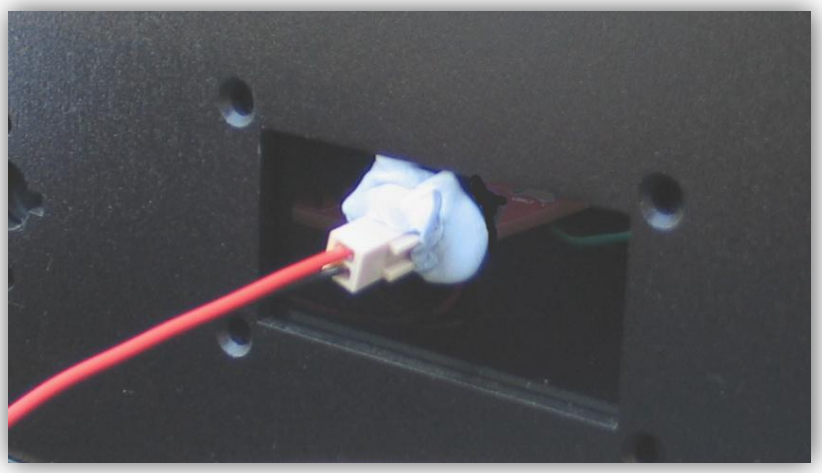

12.3 Installing the Chassis Top

- ☐ Install the chassis top using the provided hardware.

www.AudioNoteKits.com
audionotekits@rogers.com

Section 13

Final Thoughts

13.1 Congratulations

If you've made it to this point then CONGRATULATIONS! — you are ready to insert your amplifier into your real system, sit back, and enjoy the music.

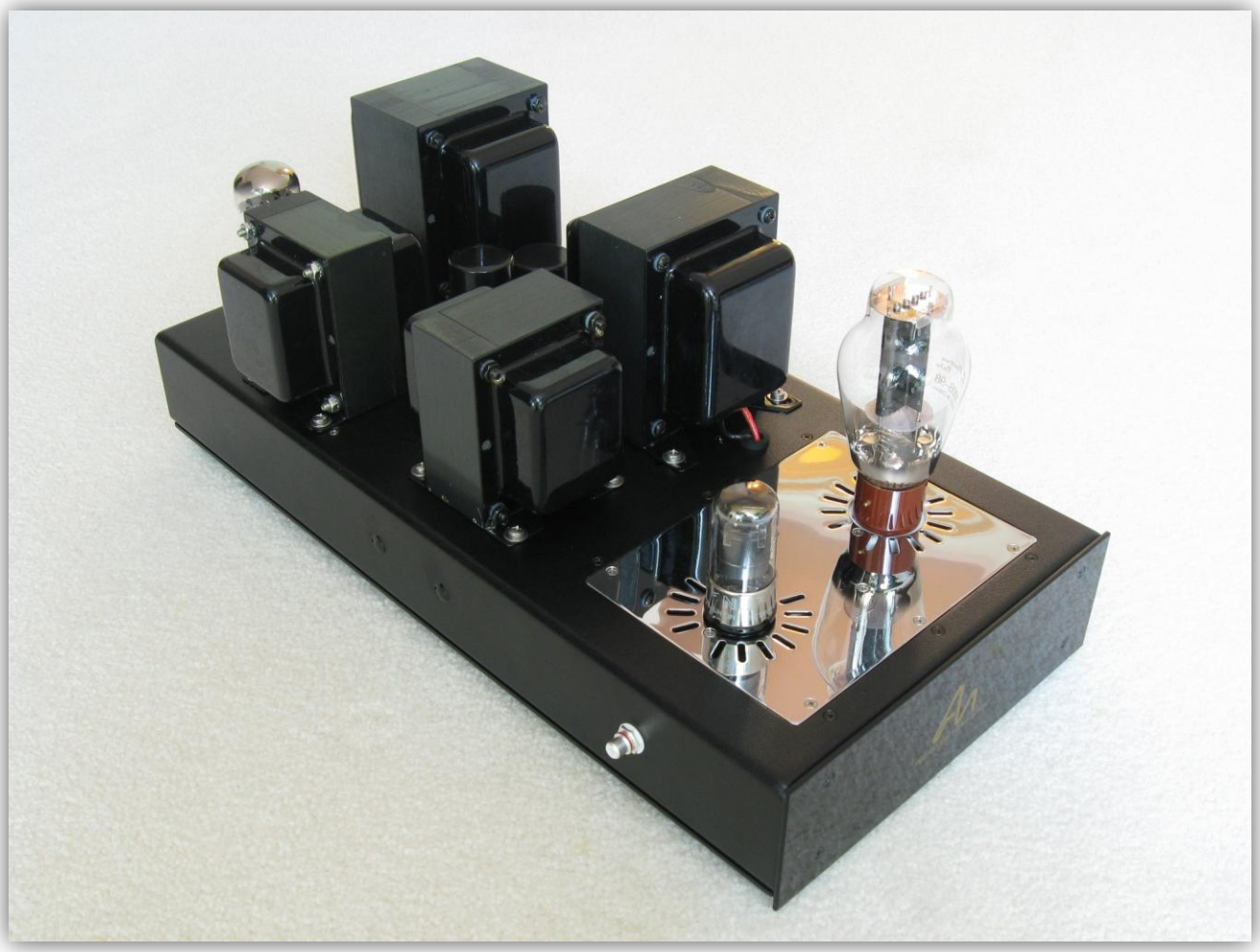

13.2 Cables

In our experience, a high quality power cable and good interconnects should make a noticeable improvement to the sound.

www.AudioNoteKits.com
audionotekits@rogers.com

13.3 Tube Rolling

We feel that the sound of the ANK Audio Kits Interstage Monoblock 300B SET Amplifier is truly sublime and that is destined to become a popular kit. It provides a highly detailed and transparent presentation with gorgeous sonics. Rolling some quality new production tubes and/or some nice NOS tubes will allow you to tailor the sound to your particular preferences.

13.3.1 5U4G(B)

The directly heated 5U4G(B) full-wave rectifier is a 1930s design and there are classic era NOS 5U4G(B) tubes available at reasonable prices. Of course, audio lore is that the one to have is the 274A or 274B Western Electric rectifier, if you can find one and have $1,000 or so burning a hole in your pocket. *In any case, do not substitute any other 5V rectifier for the 5U4G(B) type for which this amplifier was designed; there are some significant differences between a 5U4G(B) and other rectifiers, with respect to voltage drop and current specifications, and the result of a substitution is unpredictable and could damage your amplifier.*

13.3.2 6SH7

NOS sharp cut-off 6SH7 (driver) pentodes are readily available at very affordable prices from many tube suppliers. The 6SH7 comes in a glass tube version or with a black metal case; both tube types sound very good.

13.3.3 300B

The directly-heated 300B power triode is in current production and available at various prices. NOS tubes are quite rare and prices can be astronomical.

www.AudioNoteKits.com
audionotekits@rogers.com

13.4 Thanks

Thank you for investing in the ANK Audio Kits Interstage Monoblock 300B SET Amplifier and congratulations on working your way through the build. The manual is new and we would welcome your feedback. Please email us at audionotekits@rogers.com and let us know how everything went: were there any errors in the manual or instructions, parts lists, etc.? Your ideas regarding greater clarity or tweaks will also be truly appreciated.

If you have some suggestions that you feel would help other kit builders please also let us know. We can put them on a support page for other users. We'd also like to see some great pictures of your build process or your final build. We can post them on our website or on our Facebook page. And we'd love a review from you regarding the sound.

We hope the unit brings you many years of joy and we look forward to hearing from you.

www.AudioNoteKits.com
audionotekits@rogers.com

Appendix

www.AudioNoteKits.com
audionotekits@rogers.com

Resistor Color Codes (5 band)

Black	- 0
Brown	- 1
Red	- 2
Orange	- 3
Yellow	- 4
Green	- 5
Blue	- 6
Violet	- 7
Grey	- 8
White	- 9

Resistor color codes are read from the color that is nearest the edge of the resistor - that is treated as the first column.

The first column of a 5-band resistor is the 100's column, followed by a 10's column, followed by a units column.

The fourth band is a multiplier (or decimal point shifter). The multiplier can use the additional colors silver and gold. These are used for very small values and turn the multiplier into 0.01(silver) and 0.1 (gold). For the standard colors, it determines how many times the column value is shifted to the left (i.e. multiplied by 10)

The fifth column is a tolerance value. These can be quite complex but we will not concern ourselves with these.

Examples

100R	1	0	0	x 1
680R	6	8	0	x 1
820R	8	2	0	x 1
1K	1	0	0	x 10
2K2	2	2	0	x 10
2K7	2	7	0	x 10
3K3	3	3	0	x 10

10K	1	0	0	x 100
68K	6	8	0	x 100
82K	8	2	0	x 100
330K	3	3	0	x 1,000
220K	2	2	0	x 1,000
470K	4	7	0	x 1,000
1M	1	0	0	x 10,000

You can also find an 'Interactive Resistor Color Code Calculator' on our website (available from the Links page).

www.AudioNoteKits.com
audionotekits@rogers.com

Mains Wiring for 240V

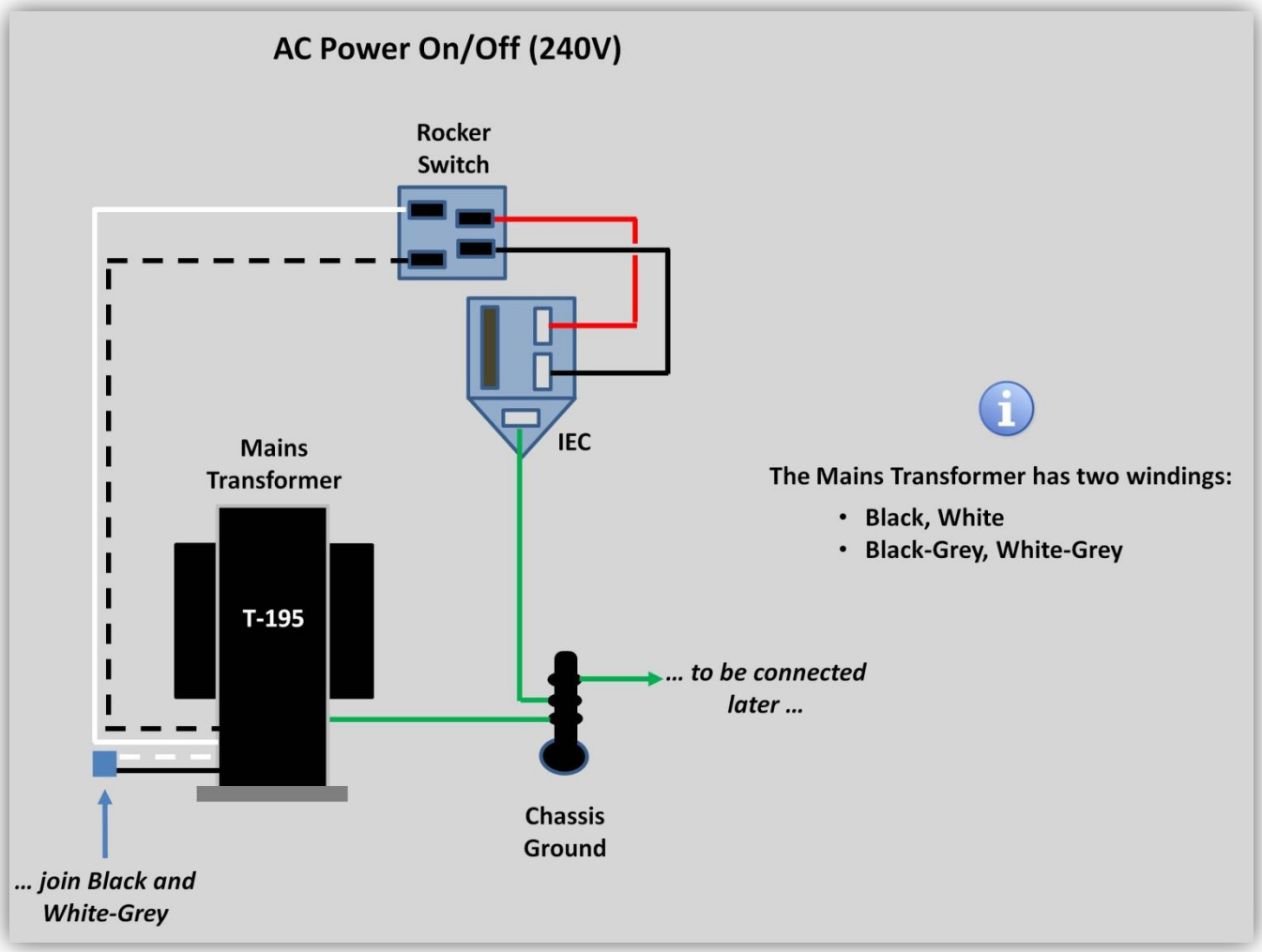

www.AudioNoteKits.com
audionotekits@rogers.com